Owner's Manual

Manual Part No.
420-0498

MANUFACTURED BY
Gremlin/SEGA

CARNIVAL
Operating Instructions
and
Service Manual

INTRODUCTION...

This is an electronic game that makes extensive use of digital integrated circuitry and television monitor circuitry. This manual assumes the maintenance technician possesses a general knowledge of solid state circuitry microprocessor, TTL digital integrated circuitry and T.V. monitor concepts. Any individual **not** knowledgeable in these areas **should not** attempt repair of the electronic portion of this game. **It should be noted that any attempt to repair the game in the field without the express consent of the factory will immediately void the warranty!!!**

IMPORTANT NOTES...

An important service note is posted in this game and is repeated here for emphasis.

> **If at any time the T.V. screen shows a meaningless display or the game otherwise malfunctions, simply drop a coin into the coin mechanism. This should correct the problem. If not, the game requires service.**

The circuitry in this game has been arranged so that the insertion of a quarter through the coin mechanism will reset the restart in the system. This clears up temporary problems caused by power line disturbances, static, etc.

SERVICE TECHNICIAN NOTE:

The system reset circuitry described above requires that the coin counter is attached to the system. If there is a coin counter problem and no replacement is available, the game will function properly if a 10K Ohm resistor is connected across the coin counter input pins to the video logic board.

ALSO...

Never replace any components with anything other than exact replacement parts. (See Parts List located on Service Schematics.)

Never remove circuit boards/connections while power is on.

Do Not replace the fuse with anything other than the proper value. A blown fuse indicates an overload condition within the game. Replacing the fuse with a higher value can cause severe damage to internal components if an overload occurs.

Always consult the manual before attempting repairs.

Correspondence regarding this game should be addressed to:

GREMLIN INDUSTRIES INC
8401 Aero Drive
San Diego, California 92123
(714) 277-8700

REPACKAGING INSTRUCTIONS . . .

Arcade

Arcade Version

1. Carefully lay game on its side
2. Attach pallet with **four** 5/16" - 18 x 1-3/4" bolts, as shown.
3. See Final Recrating Instructions, below.

Mini-Video

Mini-Video Version

1. Place game upright inside bottom cover.
2. Slide cover over game. Add protective packing material.
3. Place top cover over side cover.
4. See Final Recrating Instructions, below.

Cocktail

Cocktail Version

1. Place game inside carton.
2. Add protective packing material
3. Place inside protective top cover over unit.
4. Close flaps and secure with shipping tape
5. See Final Recrating Instructions, below.

FINAL RECRATING INSTRUCTIONS . . .

Place game upright. Tape down game keys. Then, crate the game using appropriate shock-absorbent packing material. Include packing on edges of game. **Secure package with strapping.**

Note . . . If the game is to be shipped to Gremlin Industries for service or repair, attach a tag identifying the distributor and indicate the service or repair to be done. Include the full serial number of the game

All items must be shipped prepaid.

GAME CONCEPT...

CARNIVAL is a 1 or 2 player alternate action game that simulates a carnival shooting gallery. The playfield consists of three target rows, a rotating pipe wheel, a bonus message panel, and a "special" target block.

The player uses a left-right control to position a rifle at the bottom of the screen, and a shoot control to fire the rifle. Two rows of bullets at the bottom of the screen indicate the number of shots remaining to the player. Every time the player shoots, one of the bullets disappears from the screen. More bullets are given during the first round than the others, so, the inexperienced player will have a chance to enjoy the play.

The game ends when the player runs out of bullets. This can occur on any round. A round ends when the player clears the playfield of all targets. At this point, a special "shoot the bear" sequence appears, and when this is finished the player proceeds to the next more difficult (and higher scoring) round. This is Gremlin's Multi-Phase design concept that keeps games challenging to players of all levels.

When a player completes a round (ending with "shoot the bear" sequence), the screen flips to the other player. When the original player resumes play, he advances to the next level of difficulty, exactly as he would have if the screen had not flipped to the other player. This method allows the players to more directly compare their scores, since they are always within one round of each other. Note that the player who ends the game first does not necessarily lose--he might still have the higher score when the game ends.

The three target rows move in a horizontal line from left to right (top row), right to left (middle row) and left to right (bottom row). There are five types of targets. The rows move as a continuous band--the targets exiting the playfield from the right side of the bottom row reappear at the left of the top row. The point value for hitting a row target is indicated along the right side of the game--maximum points for a top row target, medium points for a middle row target, minimum points for a bottom row target. These values increase from round to round.

Rabbits and owls are simple targets, which disappear when hit.

Numbered sign targets award additional bullets to the player when hit, as well as awarding the points indicated for the row. These targets appear only on the top two rows to make them relatively difficult targets.

Five small letters, B, O, N, U and S are randomly interspersed through the target rows. At the upper right of the playfield is the word "bonus" spelled out in small letters. If the player manages to hit the moving bonus letters <u>in order</u> (b-o-n-u-s) a special bonus is awarded. The fact that the bonus is still active is shown by the bonus word in the upper right of the playfield. Every time a bonus letter in the correct order is hit, the small corresponding letter in the bonus panel enlarges to show that it has been hit. Whenever a bonus letter is hit out of order, the bonus panel disappears until the next round. The bonus panel reappears at the beginning of every round. The bonus value is determined by adding row target points into the bonus value. When the "B" letter is hit, the bonus value freezes for that round. This encourages waiting as long as possible before attempting to score the bonus.

Ducks are special targets. Whenever a duck reaches the bottom row, it is capable of leaving the row and flying down toward the player. If the duck manages to get past the player's rifle without being shot, it flies down to the bullet row and quickly eats 10 bullets. A maximum of

three ducks can escape simultaneously.

The target rows move as a continuous band of targets, and no new owls, rabbits, or bonus letter targets are added once the round starts. "More shots" targets and ducks are added during a round. The frequency of adding duck targets is tied to the round number. As the rounds get more difficult, more ducks are added as the round progresses.

A flying duck hit scores no points.

Bullets left over at the end of a round earn 50 points each.

The between rounds "shoot the bear" sequence operates as a shooting gallery bear. Whenever the bear is hit, it rears up, roars, and continues motion in the opposite direction. Each hit speeds up the bear, and increases the point value, which is shown above the bear for each hit. When the bear leaves the screen (which it will always do eventually, since it speeds up with each hit) the between rounds sequence ends and a new round begins. As the rounds progress, more bears (a maximum of 4) appear on the screen simultaneously.

A special yellow-rimmed score panel appears in the upper left of the playfield, and stays on for random lengths of time. Four types of panels appear here, which either add or subtract points or bullets. Hitting any part of the panel border awards the score shown inside.

The bullet bonus panel is shown with a large plus sign, and a row of bullets. Immediately after appearing, the bullets begin disappearing fairly rapidly. When the bullets are depleted, the panel disappears. If hit, the player is awarded the number of bullets left in the panel when it was hit.

The score bonus is shown with the same large plus sign, and a score value. As with the bullets, the score value quickly decreases, until it hits zero and disappears.

The minus panels are similar to those above except a large minus sign indicates the number of bullets or points subtracted when hit. This discourages the practice of parking on the left margin and shooting--a miss will hit the negative target. These panels show a fixed number of bullets or points, and after a random time interval, disappear.

The pipe wheel contains eight pipes of four different colors. A panel beneath the wheel restricts pipe hits to horizontally oriented pipes, and also indicates the point value for hitting a pipe. Every shot the player takes decrements the pipe value, except a shot which hits a pipe. This makes it advisable to hit pipes early in the round, when it is most difficult (since the player must shoot through heavily populated target rows). Hitting two pipes of the same color with two <u>consecutive</u> shots awards a bonus of four times the pipe value shown in the panel.

CARNIVAL is accompanied by background music. At the beginning of every round, the music begins at a slow rate and relatively low key. As the round progresses, the music speeds up and the melody shifts up in key. This gives the player a growing sense of urgency. As the round progresses, the playfield motion also gradually speeds up.

A small panel on the right of the playfield contains a musical note symbol. If the player wishes to turn off the music, he simply shoots the note panel. This makes the note disappear, and turns off the music. Hitting the panel again makes the note reappear and resumes the music. The note thus acts as a "flip-flop" switch to turn the music on and off. Every round begins with the music on.

There is a special case to consider near the end of a round: the player has cleared all of the targets except the ducks, and has plenty of bullets

left so that he can simply sit and wait for the ducks. He would, in effect, prolong the game by refusing to end the round.

Theoretically, by hitting the ducks and "more shots" signs, the round could be prolonged indefinitely. However, an internal "doomsday" timer in the game keeps track of how long a round has lasted. After a certain time limit (the same for each round), the frequency of new duck appearances increases dramatically.

CARNIVAL contains the following sounds:

- A clang sound every time a row target or bear is hit;
- A pipe hit sound whenever a pipe is hit;
- A bear roar whenever the bear is hit and rears up;
- Three different duck quack sounds, to accompany up to three simultaneously escaped ducks;
- A bonus sound for lighting the BONUS letters in the correct order;
- A secondary bonus sound for pipe bonus and special panel bonus;
- A rank sound as the player's score moves up in rank;
- Background music;
- Rifle shot.

The top three scores are shown during advertising, along with the player's initials. A player who scores in the top three is allowed to enter three initials by a special routine explained at the time of their writing. The rank is updated during the round. The player is both audibly and visually rewarded. There is a pronounced audible sound as the player's score passes that of another ranking player's score. And, they may watch their rank progress during the game.

CARNIVAL's basic play action is outlined below, as it appears in the game instructions.

- Shoot all targets and pipes to advance to the next round.
- Game is over when you run out of bullets.
- Escaped ducks eat 10 bullets.
- Hit B-O-N-U-S letters in sequence for special bonus.
- Bonus value stops increasing when "B" is hit.
- Hit same color pipes with 2 consecutive shots to score 4 times pipe value.
- Shoot number signs for more bullets.
- Shoot the bear between rounds for extra points.

ADJUSTMENTS: Switch inside coin door turns on/off pipe hit sound during advertising sequence.

NEW GAME BOARDS AND NEW EPROMS...

The following chart shows the two kinds of logic boards Gremlin will use in future games. These will be either a SINGLE VIC board or a DUAL VIC board. Also shown are the possible combinations of Eprom types that Gremlin will be using. The 2 Eprom types are:

1) 2708 (holds 8K of memory)
2) 2716 (holds 16K of memory).

Obviously, the 2716 holds twice as much information as the 2708, **but the 2 Eproms are not directly compatible**—in other words, you have to replace a 2716 with another 2716, and a 2708 with another 2708. In addition, the 2716 Eprom socket is modified slightly to accept the 2716 Eprom. If it is ever necessary to replace a new Eprom, be sure to specify **2708** or **2716** . These numbers are printed on the Eprom package.

Logic Board Type	Possible Eprom Types Used	Where Used
SINGLE VIC board (see photo)	1) All 2708's	HEAD-ON 1 HEAD-ON 2 Future games
	2) 2708's and one 2716 (used in combination)	INVINCO DEEP SCAN Future games

The two Eprom types are used since some game programs require a larger memory than that provided with a set of 2708's. Usually, one 2716 provides enough additional memory space to hold a longer program.

POWER SUPPLY MODIFICATIONS...

For VIC Logic Boards Only

In order to supply – 5 volts to the VIC logic board, it was necessary to modify the game power supply. The modification simply adds a 7905 – 5 volt regulator (Gremlin part #313-0023) to the power supply chassis; the 7905 is connected into the – 12 volt line at pin 11 of the power supply output connector. **PIN 17 OF THIS CONNECTOR NOW BECOMES THE – 5 VOLT OUTPUT.** The other pins remain the same:

pin 11 = – 12v
pin 12 = + 12v
pin 13 = 2-3 V AC signal
pins 14, 15, 16 = GROUND
pin 17 = – 5v
pins 18, 19, 20 = + 5v

Also, a 8900 ufd filter capacitor has been added to the power supply to provide better + 12 volt regulation.

TRANSFORMER VOLTAGE CONVERSION INSTRUCTIONS...

To convert the game transformer to 100, 115, or 230 VAC, refer to the following chart:

*For 100 volts. Connect the voltage INPUT lines to transformer terminals 1 and 2.

*For 115 volts: Connect the voltage INPUT lines to transformer terminals 1 and 3.

*For 230 volts: Connect the voltage INPUT lines to transformer terminals 1 and 4. The fluorescent lamp line must be connected to transformer terminal 3

ALSO, THE TV MONITOR MUST BE CONVERTED TO THE SAME VOLTAGE INPUT AS THE GAME TRANSFORMER. REFER TO THE MONITOR MANUAL IN THE GAME.

MAINTENANCE PROCEDURES . . DUAL games

I. Power Supply (Refer to drawing #815-0020, sheet 4)

1. Remove output connectors from power supply.
2. Make these initial tests: (GND to BLACK lead on C18, 9000 ufd capacitor)
   a. +9 VDC on POSITIVE terminal of C18
   b. +17-19 V on C6 (4700 ufd cap.)
   c. -17-19 V on C5 (4700 ufd cap.)
   d. -12 V at output pin 11 (adjustable by trim pot R42)
   e. +12 V at output pin 12 (adjustable by trim pot R8)
   f. +5 V at output pins 18,19,20 (adjustable by trim pot R9)
   g. GND (ground, 0 V) at pins 14,15,16
   h. 2-3 V AC at pin 13 (Don't forget to change meter scale to AC)
   i. -5 V at pin 17
3. Check these voltages again with the logic board connected. If any are wrong, a loading condition exists in the logic board, most likely.

II. Logic Board

The following instructions will help you trace down and find most problems associated with the logic board. The procedures are listed by the more common kinds of problems that could arise. Read through all the steps first, then apply them one at a time. The necessary equipment are an oscilloscope and AC/DC voltmeter.

1. NO PICTURE: TV TUBE AND FLUORESCENT LAMP ARE OFF

   a. Plug the game in and check to see that it is receiving 115 (230) VAC. Measure 115 VAC at the input terminals of the game transformer. If it is not present here, proceed to next step.

   b. Check the fuse; if it is good, proceed to next step.

   c. Remove the cover of the junction box in back of the game. Measure 115 VAC on the output of the line filter. If it is not present, the line filter may be bad. Or, one of the AC line connections in the junction box may be loose. UNPLUG the game and re-check these connections.

   d. If the fluorescent lamp still does not operate, turn off game and on again. This usually re-starts the lamp. If it doesn't, turn the lamp in its socket; this will re-seat it for a better connection. Sometimes the lamp works loose during shipment.

   e. An ON/OFF switch for the TV monitor is located on the TV chassis, below the neck of the picture tube. Make sure it is ON.

2. NO PICTURE: TV TUBE AND FLUORESCENT LAMP ARE ON. SCREEN BLACK.

   a. First, make a quick check of the monitor-to-logic board connections: Are all wires making contact with the pin connector? Are the wires secure on the monitor plug-in connector?

b. Check to be sure U14 is seated in its socket properly, and that no pins are bent. This IC is a Prom that develops the necessary video timing sequences. Usually if one pin on the chip is out of the circuit, the screen will appear black. Proceed to next step if this chip is seated correctly.

c. Inspect the high-voltage lead coming off the monitor's high-voltage transformer. This lead attaches directly to the TV tube. Sometimes, during shipment, this wire is jostled out of contact with the transformer. Turn off the game, and carefully push the wire down, toward the transformer, to re-seat it. Now check to see if the picture comes on. If it doesn't, proceed to step d.

d. Using a voltmeter, measure the three voltages powering the logic board. These voltages, +5,-5, +12 volts can easily be measured at the power supply-to-logic board connection. If all the voltages are present, go to next step.

e. Using an oscilloscope, test for clock signals at the following points: (For the moment, don't worry about what each signal should look like; We're concerned with finding floating signals, and/or signals that are not present when they should be, and why they are not.)The scope setting is .2v/div. @ 5usec., with a 10:1 probe. All clock signals, except the video signal, are about 5 volts in amplitude.

Check pin 6 of U50. Look for a 1½-2 volt video signal. If not there, check pin 4 of U50. If it is here, U50 is probably bad.

* If the signal is not at pin 4 of U50, suspect U37 and U67.

* Check the following IC's and pins for any floating or missing signals: U13, pin 8. U22, pin 9. U15, pins 11,12,13,14. U14, pins 1-7, 9. U19, pins 2,6,10,15. U20, pins 2,7,10,14,15. These chips make up the video timing circuit. Make sure there are no floating or missing signals on any of these chips. If there are, suspect the chip is bad.

3. PICTURE APPEARS: COLOR IS DISTORTED; SOME COLORS MISSING

a. Check the red, blue, and green output signals on U67, pins 4,7,9, respectively. If no signals present, suspect U67, U49, or U66.

4. INCOMPLETE PICTURE: RANDOM DISPLAY

a. Sometimes the game appears on the screen with parts of the picture showing incorrect information. For example, the "HI SCORE" listings display jumbled information, while the rest of the picture is normal. The most likely cause of this problem is one of the 8 Ram IC's U69 through U76. The quickest way to find the bad Ram is simply to replace each IC, one at a time, with knowngood Rams. Be sure not to bend any pins when replacing the IC's. Also, don't overlook the possibility that one of the Ram sockets is bad.

5. RANDOM DISPLAY WHEN GAME IS TURNED ON

a. Activate the coin switch a few times to see if this clears the picture. If not, turn the game off, then on again. If the jumbled display still appears, proceed to step b.

b. Check the reset circuit on the logic board. (Refer to the schematic)

When power is first applied to the game, a reset circuit consisting of Q1, Q2, U18 and U35 is triggered on to reset the microprocessor. This reset signal forces the microprocessor to start at the beginning of the game program. If the microprocessor is not reset, it will still operate—it just won't operate on the right program instructions or data, and will continually display a jumbled pattern on the screen. So, begin by checking for a 3-4 VAC signal at pin 3 of the power supply-to-logic board connector. Follow the signal through Q1, where, at the collector, a sawtooth wave appears. Then, when power is first applied, observe pin 2 of U18 as capacitor C10 slowly charges to about 3 volts. When this level is reached, U18 is triggered to change states, causing pin 3 to go high, then low. This change is inverted by U17 and finally reaches pin 26 of the Z80. Check pin 26 of the Z80 for a low-to-high signal change. If not present, one or more of the reset circuit components is bad. If it is present, proceed to step c.

c. The following lists some probable causes of the jumbled display pattern:

* one or more RAMs
* one of the Eproms, U1-8, U26-33
* The microprocessor, U 16, is bad.
* U47 (74LS245) is bad.
* U51 and U52 are bad.
* Check the 3 operating voltages, +5, -5, +12 VDC.

6. GAME DOES NOT COIN UP

a. A common problem with a game that does not coin up is that the coin switch trip wire is out of adjustment. Usually, all that is necessary is to bend the trip wire up or down, depending on whether a heavier or lighter tension is needed.

b. There may be a problem in the coin circuit on the logic board. Check U62, pins 6,8 for pulses each time the coin switch is tripped. Also, U43 and/or U62 may be bad. Suspect U45, also.

c. It is possible that one of the coin counter transistors, Q3 and Q4, is bad. Determine whether or not the counter advances each time the coin switch is tripped.

d. Don't overlook an incorrect or faulty coin switch-to-logic board connection; sometimes these wires work loose from the coin switches.

7. PLAYER CONTROLS NOT WORKING

a. Check first to be sure all control switch connections are secure. This includes checking the black wires, or ground leads.

b. If these connections are good, make sure the control panel leads are intact inside the Molex™ connector to the logic board.

c. If the controls still do not work, suspect U44 on the logic board. However, U44 could be good but might not be receiving the activating pulses from U24, pin 10 or U25, pin 12. Check these also.

Recommended Spare Parts . . .

UPRIGHT
dual games

GREMLIN PART NO.	DESCRIPTION	QTY PER 10 GAMES
130-0001	speaker	1
130-0002	speaker cover	1
200-0011	Algol color monitor	1
253-0104	Plexi front monitor panel	1
253-0120	panel logo, H02/INVINCO	1
253-0121	" " H02/DEEP SCAN	1
253-0123	" " DEEP SCAN/INVINCO	1
253-0130	" " CAR HUNT/INVINCO	1
253-0133	" " CAR HUNT/DEEP SCAN	1
390-0011	fluorescent lamp	2
220-0008	coin counter	1
220-0035	coin door lock and key	2
220-0066	coin mechanism, complete	2
220-0071	coin reject button & spring	3
220-0072	coin return stop (U-bolt)	3
475-0007	volume control	1
510-0014	slide switch	1
510-0042	coin switch	3
510-0051	push button switch	1
(800-0076)	photo coin assy.	
270-0001	line filter, junction box	1
514-0001	fuse, 2A, slo	5.
240-0007	black pushbutton control	3
510-0023	mounting/contacts for above	3
510-0050	game select switch	3
800-0056	complete joystick	2
240-0091	joystick knob	3
250-0289	threaded rod	3
250-0291	upper sleeve	3
510-0041	joystick switch	5
315-0019	2708 Eprom, blank specify by number on Eprom	1 set
315-0050	2716 Eprom specify by number on Eprom	1 set

316-0246	color prom INV/DS	1
316-0283	color prom HO2/DS	1
316-0287	color prom HO2/INV	1
316-0390	color prom CAR HUNT/DS	1
314-0001	555IC	5
314-0093	74LS374 IC	3
314-0099	74LS245	3
314-0104	74LS138	3
314-0105	74LS253	3
315-0031	Z80 microprocessor	2
315-0039	RAM IC	10
315-0042	Video Interface chip (VIC)	3
316-0206	video timing prom	3
475-0002	resistor pack	3
482-0010	PE8050 transistor	3
482-0014	2N4401 "	10
510-0043	6-position DIP switch	2

The following are suggested parts for all sound boards.

313-0008	LM348 IC	5
314-0042	7406 IC	5
315-0006	CMOS 4017 IC	5
315-0035	MM 5837 IC	5
315-0043	CMOS 4060 IC	5
481-0006	1N914	10
481-0008	1N5231 Zener diode	10
482-0006	2N4403 transistor	10
482-0023	2N4093 "	10
313-0004	LM741 IC	5
315-0005	CMOS 4013 IC	5
315-0009	CMOS 4081 IC	5

Gremlin/SEGA	PARTS LIST	TITLE TOP ASSY CARNIVAL UPRIGHT ENG WHT	700 - 0022 DWG NO	SH 1 OF 5	A REV
USE WITH 800-3076 FOR PARTS LOCATIONS		DRAWN SON DUONG	ENGR		
		CHECK A. AMBROSE 5-23-80	APPR		

LTR	DATE	REVISION DESCRIPTION	DRAFT	CHECK	APPR
A	5-22-80	RELEASED	SD		
		REFER TO HEXAGON CALL-OUTS ON DRAWINGS FOR THE LOCATION OF PARTS LISTED HERE.			

Gremlin Industries, Inc. San Diego, California 92123	PARTS LIST	TITLE TOP ASSY CARNIVAL UPRIGHT ENG WHT	700-0022 DWG NO	SH 2 OF 5	A REV

ITEM NO	PART NO	QTY PER ASSY					DESCRIPTION	REF DES
1	800-3076	1					ASSY BASIC KIT CARNIVAL	
2	800-3075	1					ASSY DUAL VIC LOGIC CARNIVAL ENG.	
3	140-0048	1					CABINET BASIC WHT	
4	420-0494	1					GRAPHIC, SIDE, RIGHT	
5	420-0493	1					GRAPHIC, SIDE, LEFT	
6	800-0122	1					ASSY, SHIPPING KIT	

Gremlin Industries, Inc. San Diego, California 92123	PARTS LIST	TITLE TOP ASSY CARNIVAL UPRIGHT ENG WOODGRAIN	700-0023 DWG NO	SH 2 OF 2	A REV

ITEM NO	PART NO	QTY PER ASSY					DESCRIPTION	REF DES
1	800-3076	1					ASSY BASIC KIT CARNIVAL	
2	800-3075	1					ASSY DUAL VIC LOGIC CARNIVAL ENG	
3	140-0049	1					CABINET BASIC WOODGRAIN	
4								
5								
6	800-0122	1					ASSY SHIPPING KIT	

Gremlin/SEGA	PARTS LIST	TITLE TOP ASSY CARNIVAL UPRIGHT ENG WOODGRAIN	700-0023 DWG NO	SH 1 OF 2	A REV
USE WITH 800-3076 & 700-0022		DRAWN LIEN VAN HO	ENGR		
		CHECK A. AMBROSE 5-29 80	APPR		

LTR	DATE	REVISION DESCRIPTION	DRAFT	CHECK	APPR
A	6-2-80	RELEASED	L.V.H.	[illegible]	[illegible]
		REFER TO HEXAGON CALL-OUTS ON DRAWINGS FOR THE LOCATION OF PARTS LISTED HERE.			

FORM NO 001-1500

Gremlin/SEGA	PARTS LIST	TITLE PESV LOGIC CARNIVAL UPRIGHT	800-3075 DWG NO	SH 1 OF 2	A REV
		DRAWN J. Gomez	ENGR		
		CHECK A. AMBROSE 6-2-80	APPR		

LTR	DATE	REVISION DESCRIPTION	DRAFT	CHECK	APPR
A	6-2-80	RELEASED	JO	SC	SC

FORM NO. 001-1580

Gremlin Industries, Inc. San Diego, California 92113	PARTS LIST	TITLE ASSY LOGIC CARNIVAL UPRIGHT	800-3075 DWG NO	SH 2 OF 2	A REV

ITEM NO	PART NO	QTY PER ASSY	DESCRIPTION	REF DES
1	800-0058	1	DUAL GAME VIC BD	
2	315-0019	15	IC EPROM 2708	U20-34
3	315-0042	1	CUSTOM CHIP	U48
4	316-0633	1	IC CLR PROM 32 X 8	U44
5	316-0206	1	IC PROM PGB	

Gremlin Industries, Inc. San Diego, California 92111	PARTS LIST	TITLE ASSY DUAL GAME V.I.C.	800-0058 DWG NO	SH 1 OF 8	D REV
SHT 5,6,7,8 ARE "D" SIZE		DRAWN	ENGR		
		CHECK	APPR		

LTR	DATE	REVISION DESCRIPTION		DRAFT	CHECK	APPR
A	10-11-79	RELEASED				
B	10-23-79	PER ECN 350	12-3-79			
C	11-26-79	PER ECN 359	12-10-79			
D	1-24-80	PER ECN 368	1-28-80			

FORM NO. 001-1500

Gremlin Industries, Inc. San Diego, California 92123	PARTS LIST	TITLE ASSY DUAL GAME V.I.C.	800-0058 DWG NO	SH 2 OF 8	D REV

ITEM NO	PART NO	QTY PER ASSY	DESCRIPTION	REF DES
1	151-0005	1	CAP CER 680 pf 50V	C12
2	151-0011	4	CAP CER .01 µf 50V	C73, C74, C41, C42
3	151-0012	64	CAP CER .1 µf 50V	C1,2,4,5,7,11,13-40,43-72
4	152-0001	1	CAP FILM .1 µf 100V	C75
5	153-0001	3	CAP TANT 10 µf 25V	C3, C6, C10
6	153-0002	1	CAP TANT 1 µf 25V	C9
7	153-0008	1	CAP TANT 100 µf 20V	C8
8	170-0174	1	P.C. BOARD	
9	211-0004	6	CONN PIN TEST PT	TP1 – TP6
10	212-0004	2	CONN M 4 PIN	
11	212-0021	4	CONN M 10 PIN	
12	212-0031	2	CONN M 12 PIN	
13	213-0001	11	SKT 16 PIN DUAL MIN	U14, 49, 63-76, XSW1
14	213-0003	2	SKT 40 PIN DUAL MIN	XU16, XU57
15	213-0007	16	SKT 24 PIN DUAL MIN	U1-XU8, XU26-XU33
16	230-0000	1	XTAL CLK 15.468 48 MHz	Y1
17	314-0001	3	IC MC3446	U18, U36, U37
18	314-0015	1	IC 7404	U17
19	314-0018	2	IC 74LS00	U23, U62
20	314-0019	2	IC 74LS04	U25, U[illegible]

Gremlin Industries, Inc. San Diego, California 92122	PARTS LIST	TITLE ASSY DUAL GAME V.I.C.	800-0058 DWG NO	SH 3 OF 8	D REV

ITEM NO	PART NO	QTY PER ASSY	DESCRIPTION	REF DES
21	314-0040	4	IC 74LS125	U51, U52, U54, U55
22	314-0046	1	IC 74S04	U13
23	314-0058	5	IC 74LS08	U10-U12, U35, U56
24	314-0059	1	IC 74LS10	U77
25	314-0062	4	IC 74LS74	U22, U43, U58, U65
26	314-0070	1	IC 74LS86	U50
27	314-0072	2	IC 74LS174	U53, U66
28	314-0073	2	IC 74LS175	U19, U20
29	314-0076	1	IC 74LS157	U67
30	314-0078	1	IC 74LS02	U24
31	314-0092	2	IC 8216	U47, U48
32	314-0093	2	IC 74LS374	U63, U64
33	314-0104	2	IC 74LS138	U9, U34
34	314-0105	3	IC 74LS253	U44-U46
35	314-0086	1	IC 74LS163	U15
36	315-0031	1	IC Z80 CPU	U16
37	315-0039	8	IC RAM 4K D C/SPEC 12V	U69-U76
38	315-0042	1	IC VIDEO INTERFACE	U57
39	316-0204	1	IC PROM 32X8 CTL	U14
40	390-0003	1	LED RED	D2

Gremlin Industries, Inc. San Diego, California 92123	PARTS LIST	TITLE ASSY DUAL GAME V.I.C.	800-0058 DWG NO	SH 4 OF 8	D REV

ITEM NO	PART NO	QTY PER ASSY	DESCRIPTION	REF DES
41	471-0101	1	RES 100 OHM 1/2W 5%	R5
42	471-0102	14	RES 1K OHM 1/2W 5%	R11-R13 19-24, 26-28, 39, 40
43	471-0103	3	RES 10K OHM 1/2W 5%	R10, R34 R35
44	471-0104	3	RES 100K OHM 1/2W 5%	R1, R2, R7
45	471-0183	2	RES 18K OHM 1/2W 5%	R30, R36
46	471-0220	3	RES 22 OHM 1/2W 5%	R14-R16
47	471-0221	1	RES 220 OHM 1/2W 5%	R33
48	471-0331	7	RES 330 OHM 1/2 W 5%	R3, R4, R6, R17, R18, R31, R32
49	471-0471	1	RES 470 OHM 1/2 W 5%	R8
50	471-0472	2	RES 4.7K OHM 1/2 W 5%	R9, R37
51	475-0001	1	POT 10K CAR PCMTV	R38
52	477-0002	2	RES PACK 15 X 2.2K	RP1, RP2
53	481-0001	1	DIODE IN4002	D4
54	481-0006	2	DIODE IN914/IN4148	D1, D3
55	482-0010	1	XSTR PE 8050	Q3
56	482-0014	4	XSTR 2N4401	Q1, Q2, Q4, Q5
57	510-0043	1	SWITCH 6 POS DIP	SW1
58	152-0007	2	CAP FILM .001μf 250V	C76, C77

Gremlin Industries, Inc. San Diego, California 92123	PARTS LIST	TITLE ASSEMBLY CARNIVAL SOUND	800-3057 DWG NO	SH 1 OF 6	B REV
SHT 5 & 6 ARE "D" SIZE		DRAWN	ENGR		
		CHECK	APPR		

LTR	DATE	REVISION DESCRIPTION	DRAFT	CHECK	APPR
A	4-29-80	RELEASED			
B	5-30-80	PER ECN 409 & ⑧			

FORM NO. 001-1500

Gremlin Industries, Inc. San Diego, California 92123	PARTS LIST	TITLE ASSEMBLY CARNIVAL SOUND	800-3057 DWG NO	SH 2 OF 6	B REV

ITEM NO	PART NO	QTY PER ASSY	DESCRIPTION	REF DES
1	150-0004	3	CAP E 10µf 25V	C6, C16, C22
2	151-0001	10	CAP CER .05µf 50V	C13, C18, C27, C28, C30, C33, C37, C51, C53, C54
3	151-0005	1	CAP CER 680pf 50V	C36
4	151-0012	12	CAP CER .1µf 50V	C20, C21, C34, C35, C39, C42, C43, C45, C55, C56, C63, C64
5	151-0019	1	CAP CER 330pf 50V	C3
6	151-0052	2	CAP CER 470pf 1000V	C8, C15
7	152-0001	9	CAP FILM .1µf 100V	C4, C5, C10, C12, C14, C29, C38, C40, C41
8	152-0004	2	CAP FILM .0022µf 50V	C59, C60
9	152-0005	8	CAP FILM .0047µf 50V	C2, C9, C26, C25, C31, C44, C57, C58
10	152-0007	2	CAP FILM .001µf 250V	C19, C52
11	152-0009	2	CAP FILM .0033µf 25V	C61, C62
12	152-0010	3	CAP FILM .022µf 100V	C24, C49, C50
13	152-0012	1	CAP FILM .047µf 200V	C11
14	152-0018	1	CAP FILM .01µf 250V	C1
15	153-0003	5	CAP TANT 2.2µf 25V	C7, C17, C23, C47, C48
16	153-0007	2	CAP TANT 6.8µf 25V	C32, C46
17	170-0199	1	P C BOARD	

Gremlin Industries, Inc. San Diego, California 92122	PARTS LIST	TITLE ASSEMBLY CARNIVAL SOUND	800-3057 DWG NO	SH 3 OF 6	B REV

ITEM NO	PART NO	QTY PER ASSY	DESCRIPTION	REF DES
18	212-0021	2	CONN 10PIN M PLZD	
19	313-0008	5	IC LM348	U5, U8-U10, U14
20	314-0001	1	IC NE555	U7
21	315-0035	1	IC MM5837	U6
22	315-0043	7	IC CD4069	U1-U4, U11-U13
23	471-0101	6	RES 100 OHM 1/2W 5%	R40, R49, R59, R113, R118, R121
24	471-0102	3	RES 1K OHM 1/2W 5%	R76, R86, R127
25	471-0103	21	RES 10K OHM 1/2W 5%	R11, R33, R35, R53, R54, R62, R77, R82, R83, R85, R102, R103, R105, R106, R109-R111, R128, R129, R134, R142
26	471-0104	24	RES 100K OHM 1/2W 5%	R1, R10, R16, R26, R30, R34, R37, R45, R46, R56, R62, R66, R79, R81, R104, R112, R115, R119, R125, R130, R132, R136, R137, R139
27	471-0105	24	RES 1MEG OHM 1/2W 5%	R3, R4, R8, R20-R22, R25, R28, R32, R39, R48, R58, R61, R71, R73, R80, R94, R95, R100, R123, R126, R143-R145
28	471-0153	1	RES 15K OHM 1/2W 5%	R70
29	471-0154	1	RES 150K OHM 1/2W 5%	R60
30	471-0222	2	RES 2.2K OHM 1/2W 5%	R131, R135
31	471-0223	11	RES 22K OHM 1/2W 5%	R38, R41, R42, R44, R47, R57, R65, R67, R78, R96, R114, R124
32	471-0224	1	RES 220K OHM 1/2W 5%	R98

Gremlin Industries, Inc. San Diego, California 92123	PARTS LIST	TITLE ASSEMBLY CARNIVAL SOUND	800-3057 DWG NO	SH 4 OF 6	B REV

ITEM NO	PART NO	QTY PER ASSY	DESCRIPTION	REF DES
33	471-0225	8	RES 2.2 MEG OHM 1/2W 5%	R2,R5-R7,R14,R15,R18,R27
34	471-0332	1	RES 3.3K OHM 1/2W 5%	R138
35	471-0333	2	RES 33K OHM 1/2W 5%	R91, R140
36	471-0334	4	RES 330K OHM 1/2W 5%	R116,R120,R133,R141
37	471-0395	4	RES 3.9 MEG OHM 1/2W 5%	R9,R19,R23,R24
38				
39	471-0472	1	RES 4.7K OHM 1/2W 5%	R74
40	471-0473	15	RES 47K OHM 1/2W 5%	R13,R27,R36,R43,R50-R52,
				R63,R90,R97,R99,R107,R108
				R116, R87
41	471-0474	9	RES 470K OHM 1/2W 5%	R12,R17,R31,R64,R68,R84
				R92, R101, R117
42	471-0512	3	RES 5.1K OHM 1/2W 5%	R75,R87,R93
43	471-0683	1	RES 68K OHM 1/2W 5%	R55
44	471-0754	2	RES 750K OHM 1/2W 5%	R72, R122
45	471-0823	1	RES 82K OHM 1/2W 5%	R88
46	481-0006	34	DIODE 1N914 / 1N4148	D1 - D34
47	481-0008	4	DIODE ZENER 1N5231	D35 - D38
48	482-0006	3	XSTR 2N4403	Q13 - Q15
49	482-0014	14	XSTR 2N4401	Q1-Q3,Q6-Q12,Q17-Q20
50	482-0023	3	XSTR 2N4093	Q4,Q5,Q16

Gremlin/SEGA	PARTS LIST	TITLE ASSEMBLY COIN MECH DUAL SBA	800-3081 DWG NO	SH 1 OF 4	A REV
SHEET 3 IS "D" SIZE		DRAWN Lien van Do	ENGR		
		CHECK A. AMEROSE 5-23	APPR		

LTR	DATE	REVISION DESCRIPTION	DRAFT	CHECK	APPR
A	5-23-80	RELEASED	L.H.		

FORM NO 001-1500

Gremlin Industries, Inc. San Diego, California 92123	PARTS LIST	TITLE ASSEMBLY COIN MECH DUAL SBA	800-3081 DWG NO	SH 2 OF 4	A REV

ITEM NO	PART NO	QTY PER ASSY					DESCRIPTION	REF DES
1	250-0285	1					CASH DOOR MODIFIED	
2	220-0066	1					COIN MECHANISM	
3	220-0035	1					LOCK FORT LOCK IR	
4	370-0002	2					OPTO-ISOLATOR HL 132	
5	800-0085	1					ASSY PHOTO CALCULATOR	
6	240-0001	1					KNOB. VOL. CONTROL	
7	250-0068	1					BRACKET	
8	420-0046	1					DECAL, VOL. CONTROL	
9	475-0007	1					POTENTIOMETER 10KΩ CAR.PNLMT.	
10	510-0014	1					SWITCH, SLIDE, SPDT	
11		6					SCREW 8-32x½" TAMPER-PROOF	
12		2					SCREW, MECH. RH. PHL 4-40x½"	
13		4					SCREW, SHT. MTL. RH PHL #6	
14		2					SCREW, MECH RH PHL 6-32x½"	
15		2					WASHER, FLAT #6	
16		2					WASHER, LOCK SPLIT #6	
17		2					WASHER, LOCK #4	
18		8					WASHER, LOCK SPLIT #8	
19		8					NUT HEX 8-32	
20		2					NUT HEX 6-32	
21		2					NUT HEX 4-40	
22		4					ALUMINUM RIVETS ¼"	
23	510-0051	1					SWITCH PUSH BUTTON SLIDE	
24	220-0150	1					COIN MECH SBA	
25	800-0076	1					PHOTO COIN CALC	

Gremlin Industries, Inc. San Diego, California 92123	PARTS LIST	TITLE ASSEMBLY COIN MECH DUAL SBA	800-3081 DWG NO	SH 3 OF 4	A REV

ITEM NO	PART NO	QTY PER ASSY					DESCRIPTION	REF DES
26	220-0008	1					COUNTER DIGITAL	

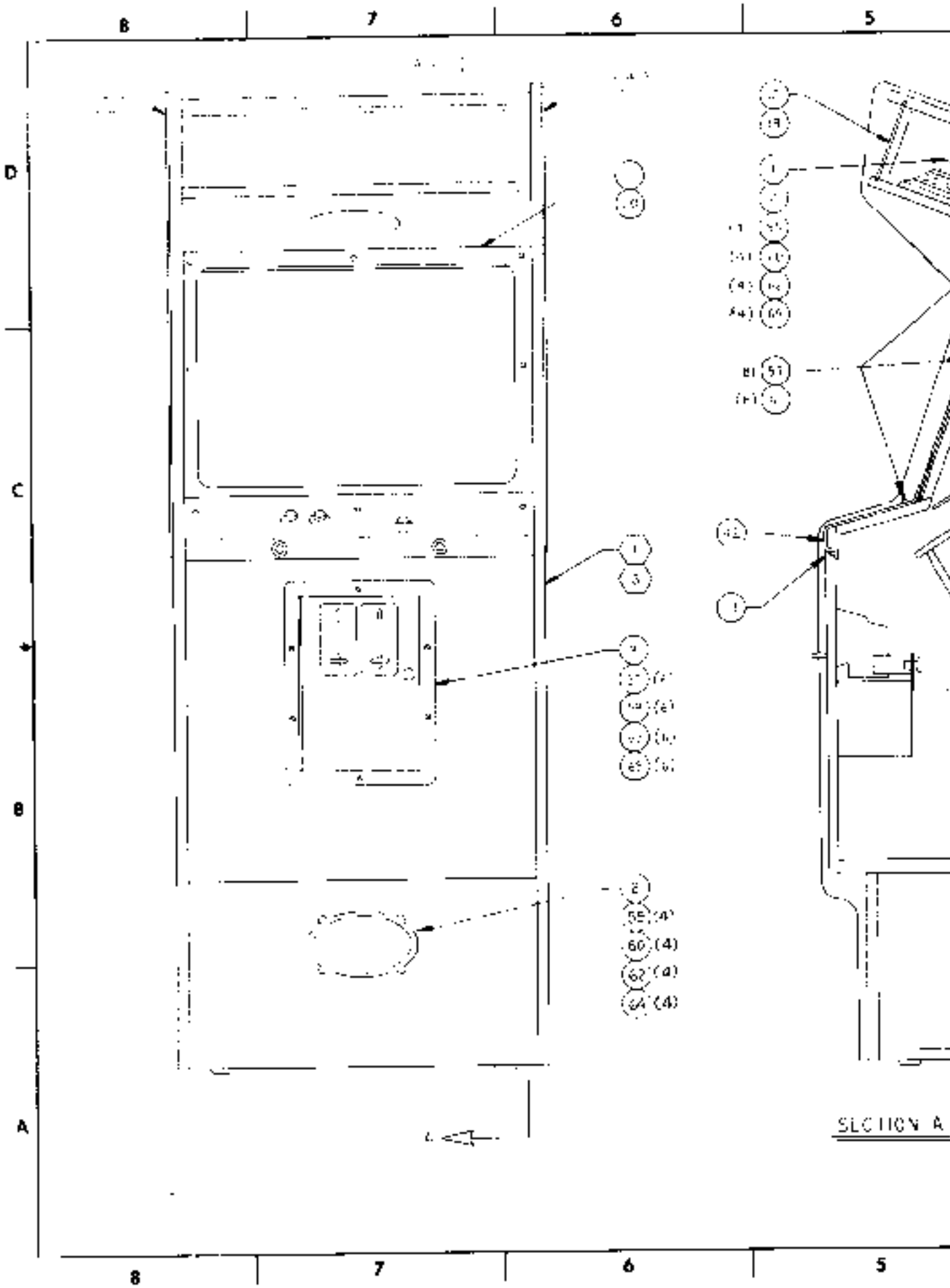
8
7
6
5
D
C
B
A
SECTION A

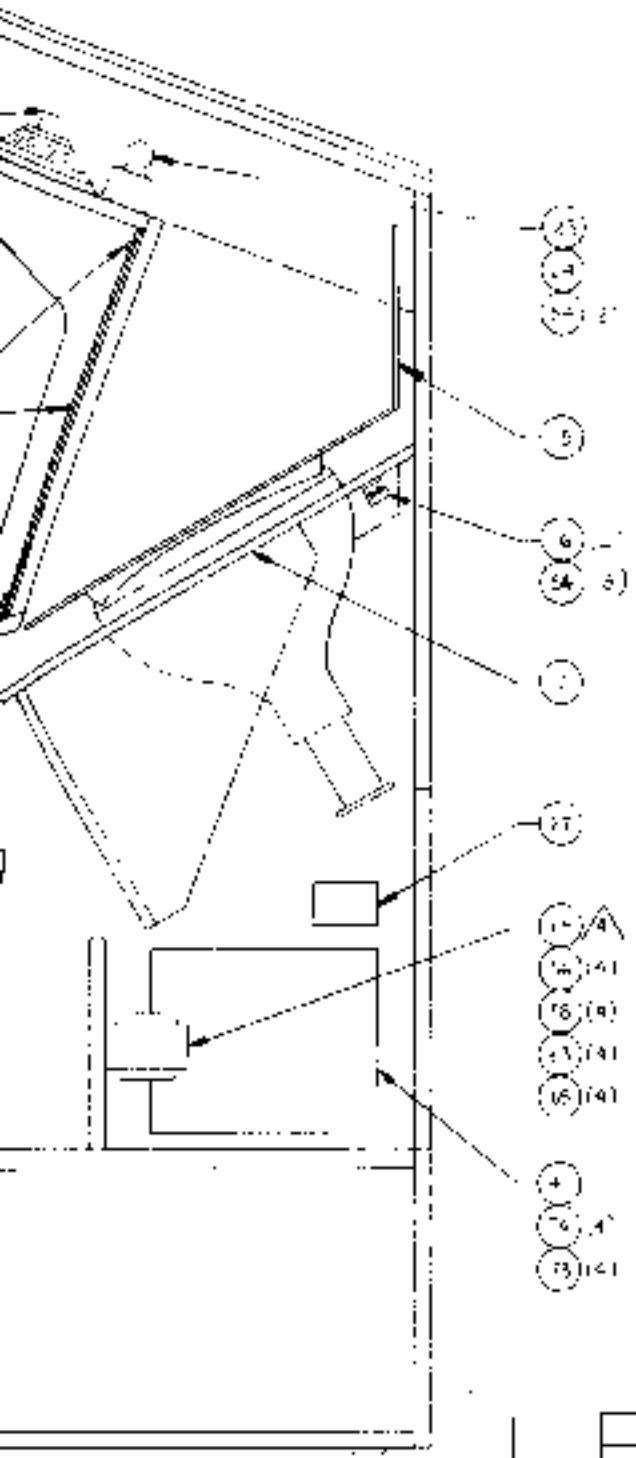

NOTES :

1. INSTALL WIRE HOLD DOWN CLIPS (ITEM 21), APPROX AS SHOWN ON PRODUCTION MOCK-UP
2. INSTALL CABLE TIES, (ITEM 5), AS REQD TO DRESS WIRING
3. INSTALL GROUND STRAP, (ITEM 18), AS SHOWN ON PRODUCTION MOCK-UP
4. XFMR TO BE MOUNTED WITH (PRIMARY) SIDE UP.

Gremlin Industries, Inc.

San Diego, California 92115

TOP ASSY

CARNIVAL JR-LIGHT

D

A

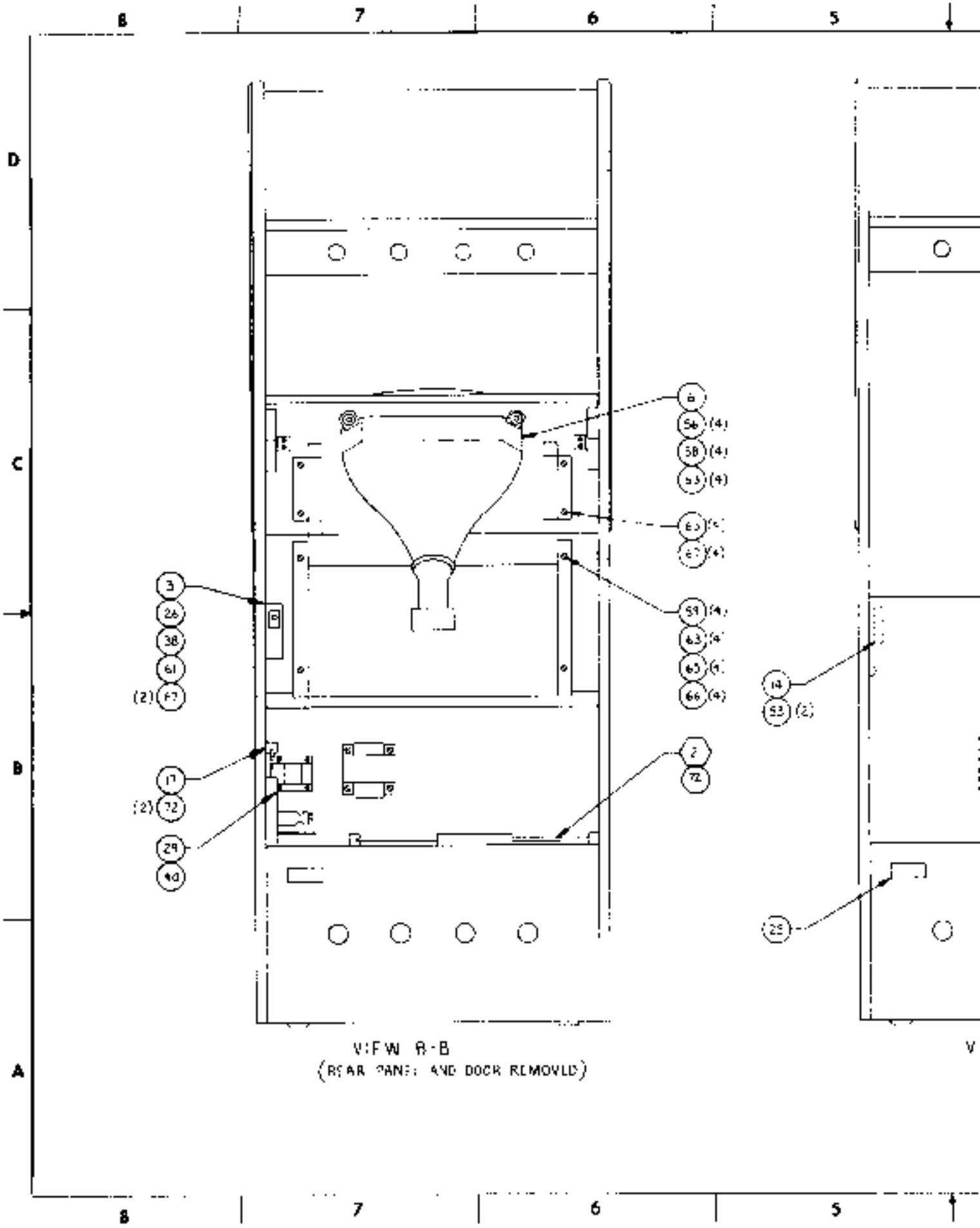

VIEW B-B
(REAR PANEL AND DOOR REMOVED)

V

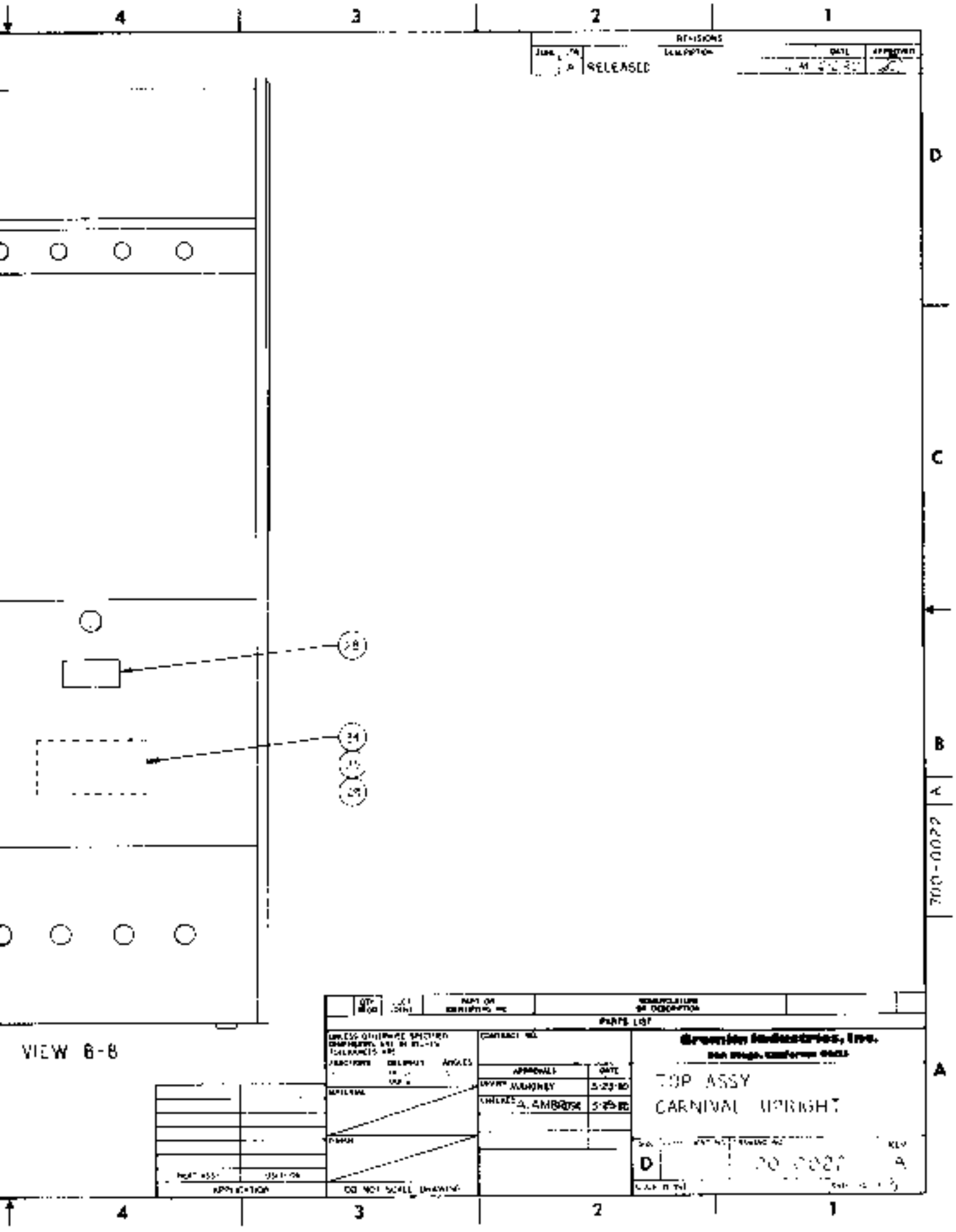
REVISIONS
RELEASED
28
34
15
29
VIEW B-B
PARTS LIST
TOP ASSY
CARNIVAL UPRIGHT
700-0022
A
D
DO NOT SCALE DRAWING

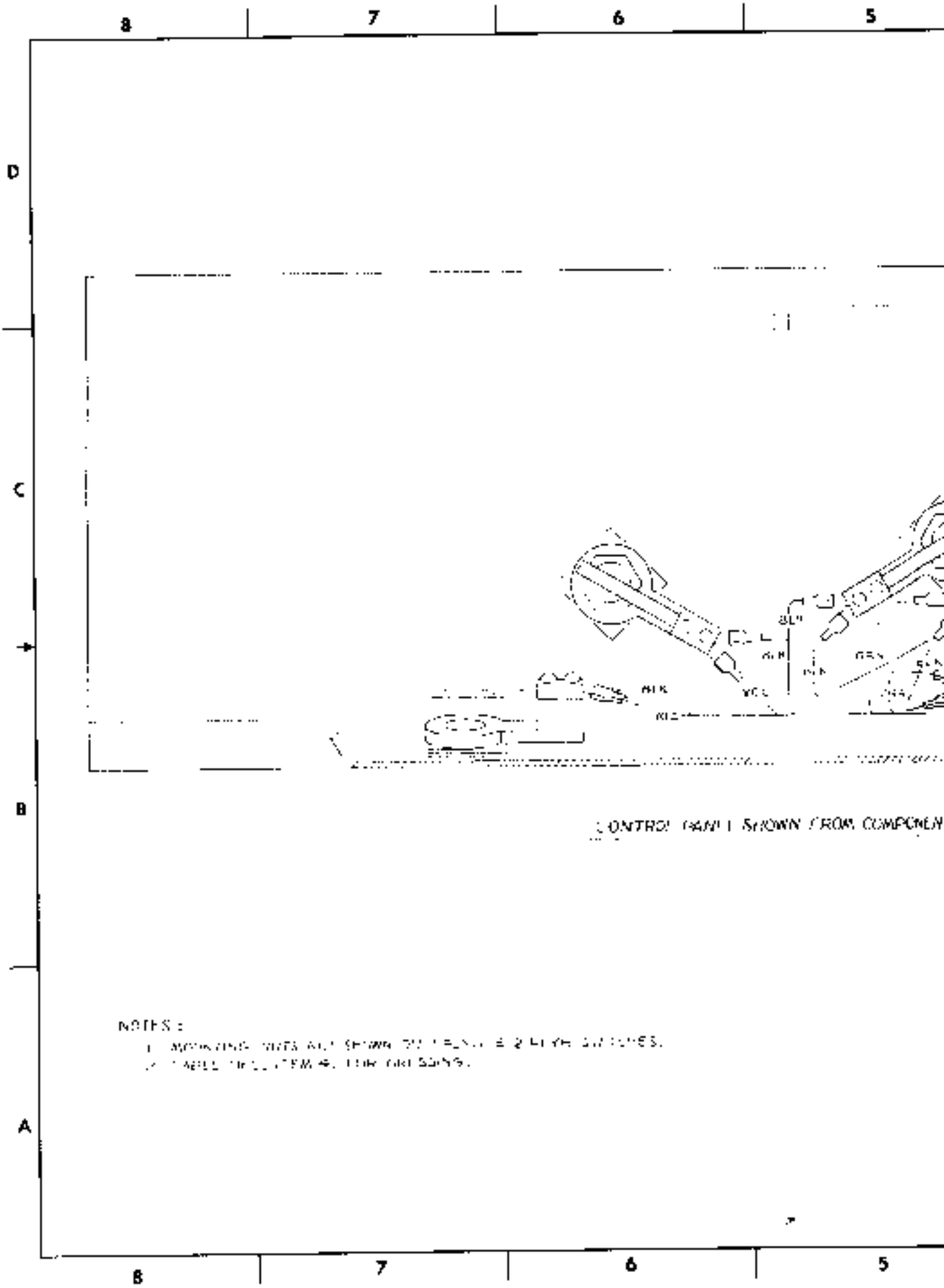
8
7
6
5
D
C
B
A
CONTROL PANEL SHOWN FROM COMPONENT
NOTES:

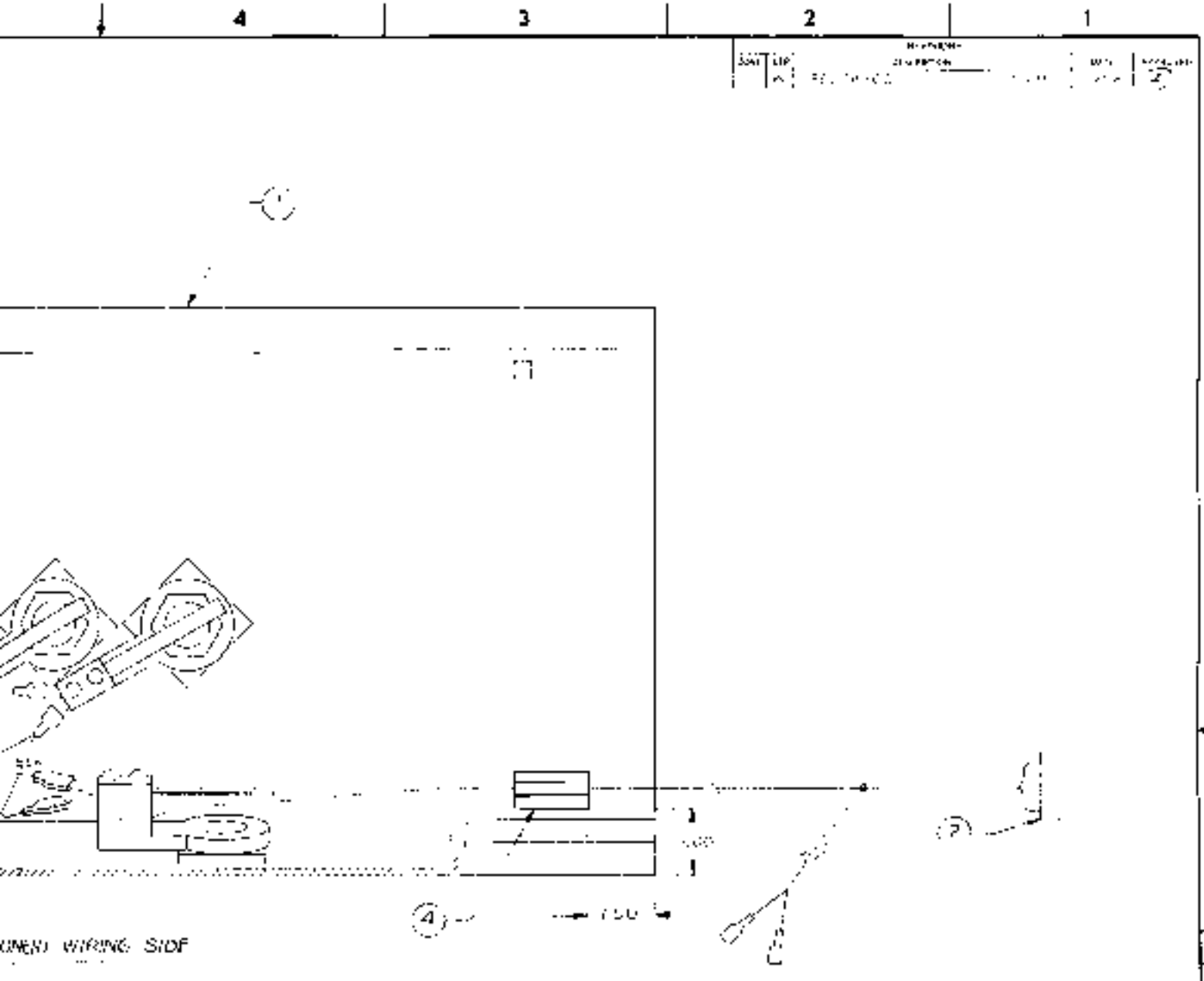

ITEM NO	QTY REQD	PART NO	DESCRIPTION
4	2	[illegible]	[illegible] WIRE [illegible]
3	2	[illegible]	CABLE TIES
2	[illegible]	[illegible]	[illegible]
1	2	[illegible]	[illegible] CAPEL

PARTS LIST

Franklin Industries, Inc.
San Diego, California 92111

ASSEMBLY CONTROL PANEL COMPLETE
CARNIVAL [illegible]

D

DO NOT SCALE DRAWING

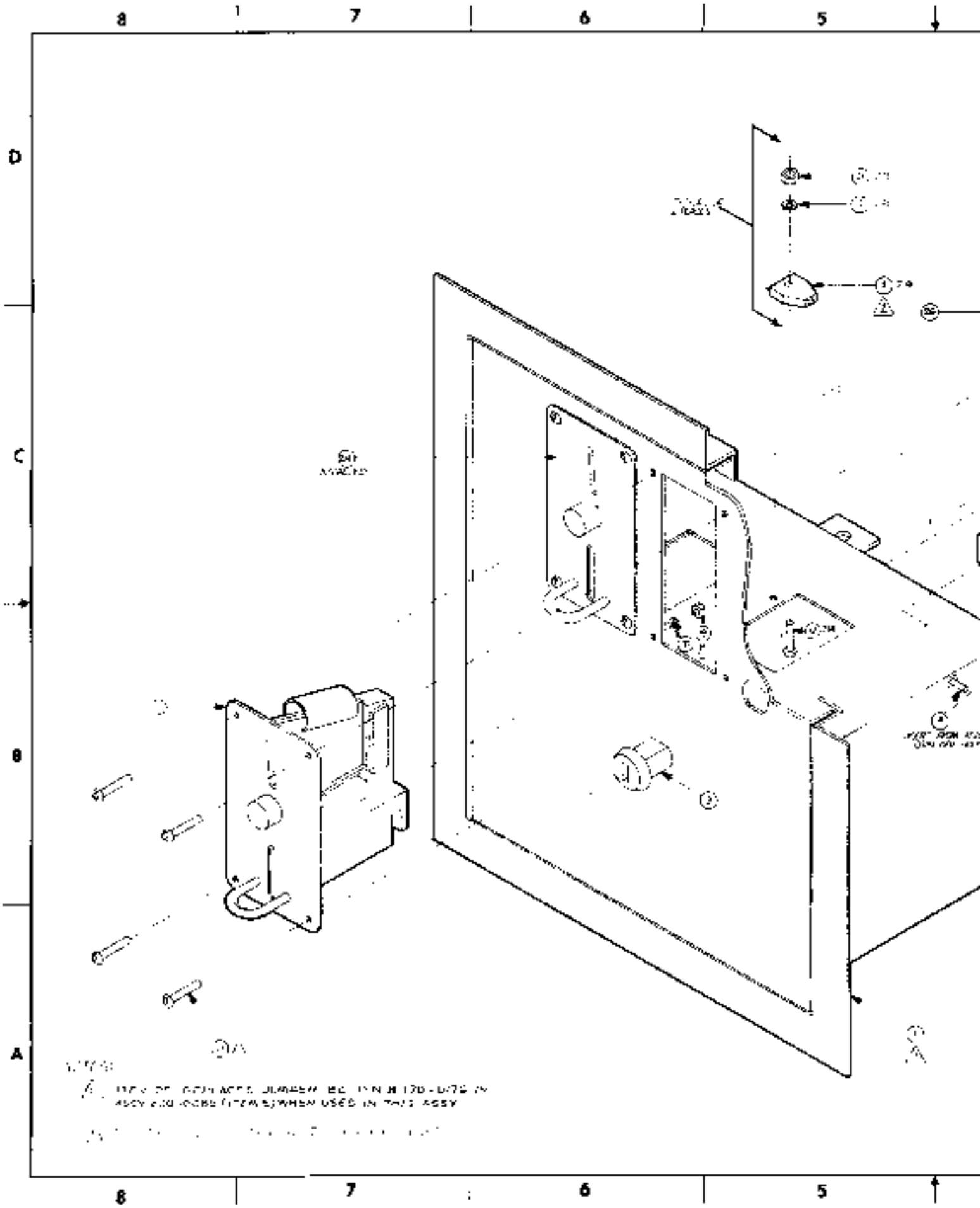

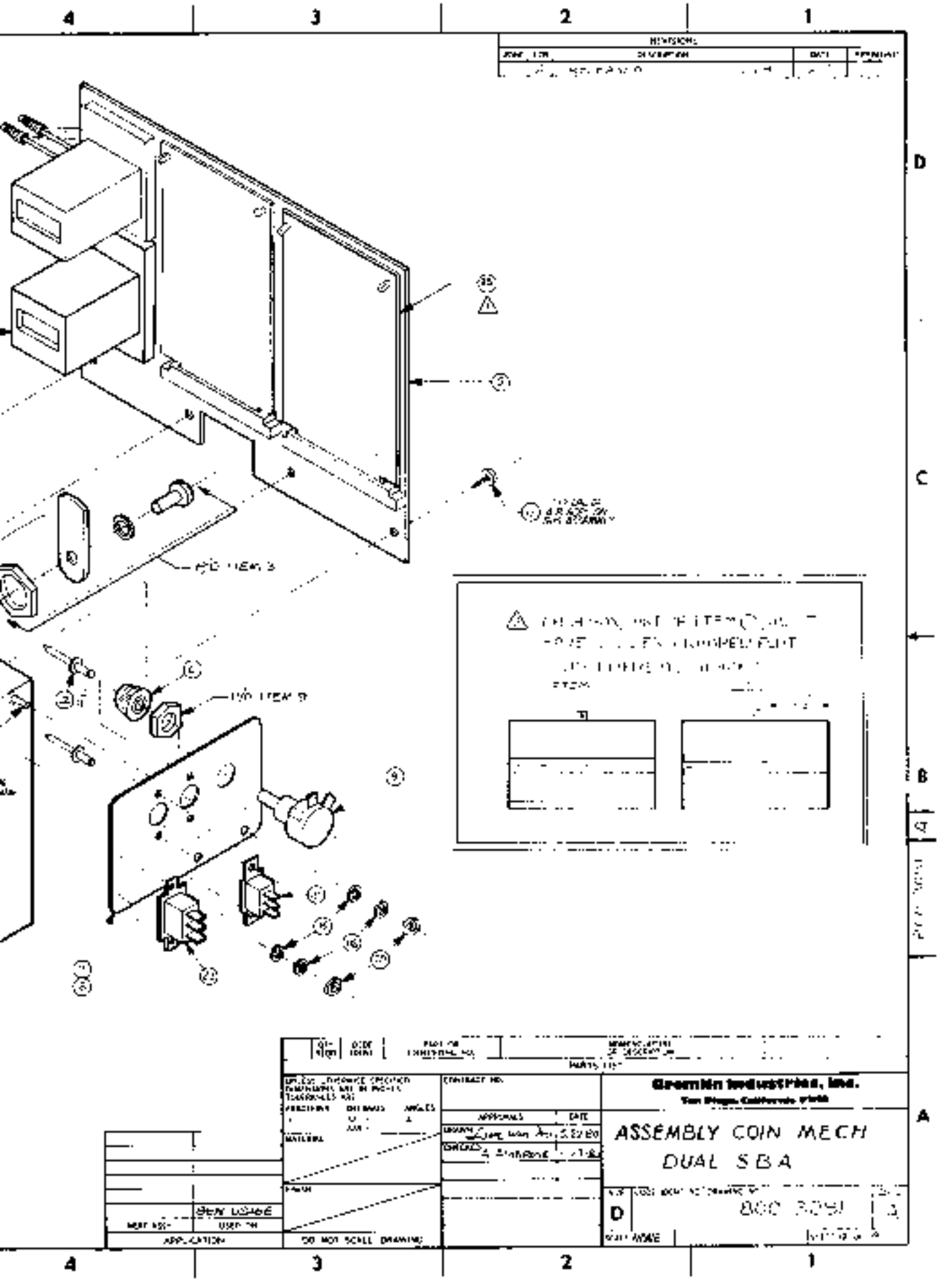
REVISIONS
PARTS LIST
Gremlin Industries, Inc.
ASSEMBLY COIN MECH
DUAL SBA
D
DO NOT SCALE DRAWING

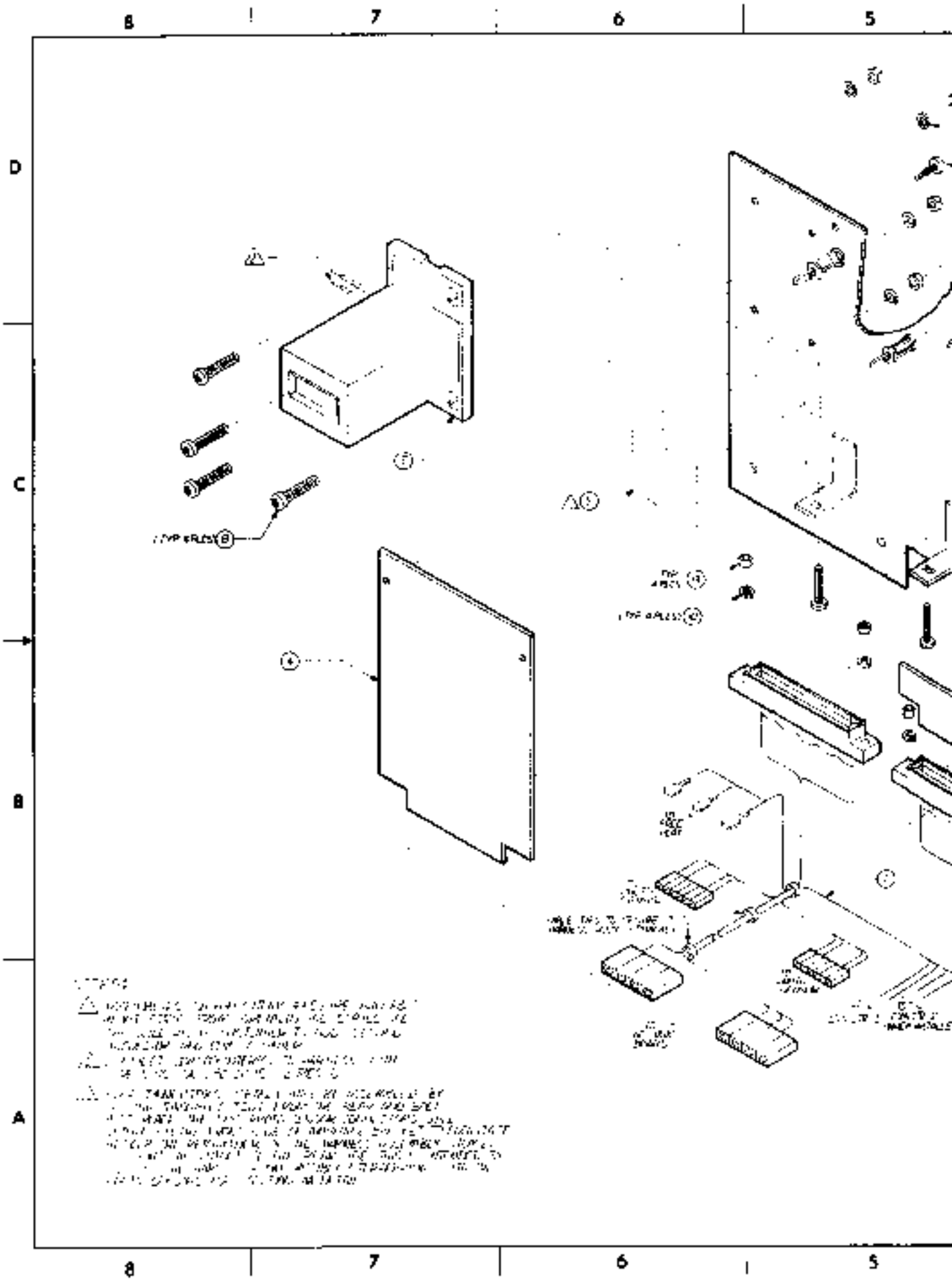

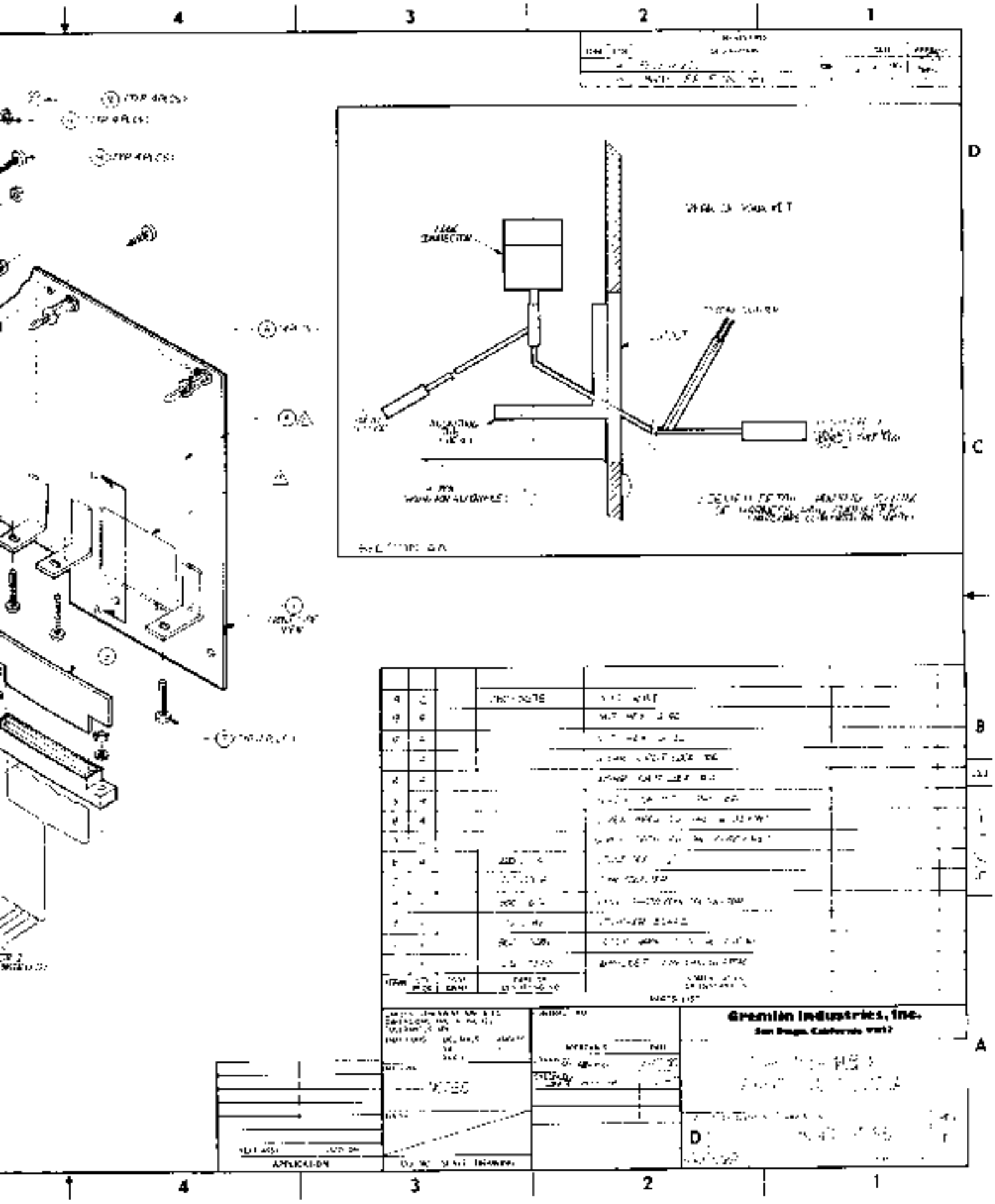
Gremlin Industries, Inc.
APPLICATION

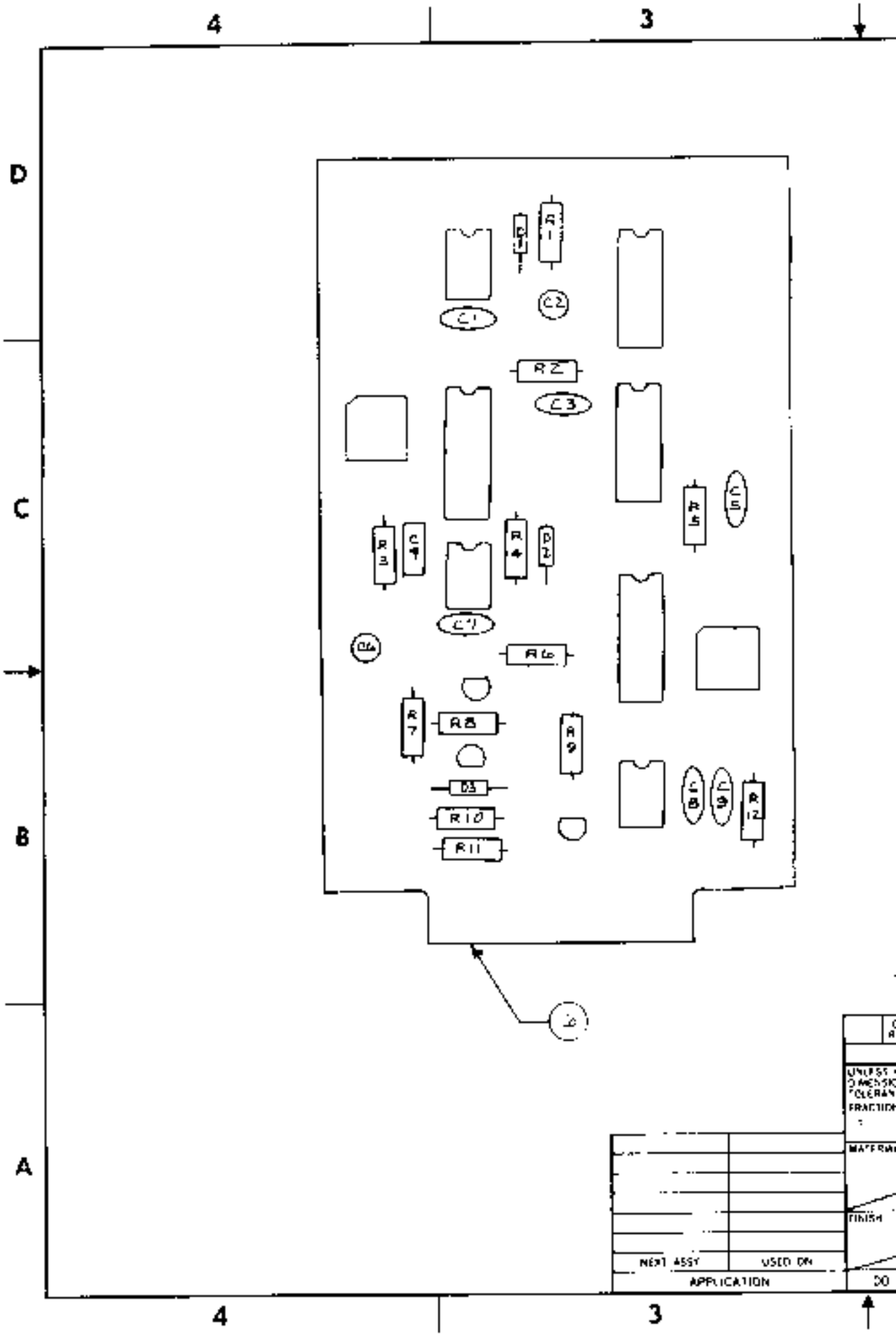
4
3
D
C
B
A
R1
D1
C1
C2
R2
C3
R3
C4
R4
D2
C5
R5
C7
D4
R6
R7
R8
R9
D3
R10
R11
C8
C9
R12
NEXT ASSY
USED ON
APPLICATION
FINISH
DO

REVISIONS				
ZONE	LTR	DESCRIPTION	DATE	APPROVED
	A	RELEASED	12 18 79	
	B	PER ECN 366	1 - 8	

SEE DETACHED PARTS LIST

QTY REQD	CODE IDENT	PART OR IDENTIFYING NO	NOMENCLATURE OR DESCRIPTION

PARTS LIST

UNLESS OTHERWISE SPECIFIED DIMENSIONS ARE IN INCHES TOLERANCES ARE
FRACTIONS DECIMALS ANGLES
.XX ±
.XXX ±

MATERIAL

FINISH

DO NOT SCALE DRAWING

CONTRACT NO

APPROVALS	DATE
DRAWN	12 19 79
CHECKED	

Franklin Industries, Inc.
San Diego, California 92123

P.C. ASSEMBLY
PHOTO COIN CALC

SIZE	CODE IDENT NO	DRAWING NO	REV
C		800-0076	B

SCALE 2/1 SHEET 4 OF 5

800-0076

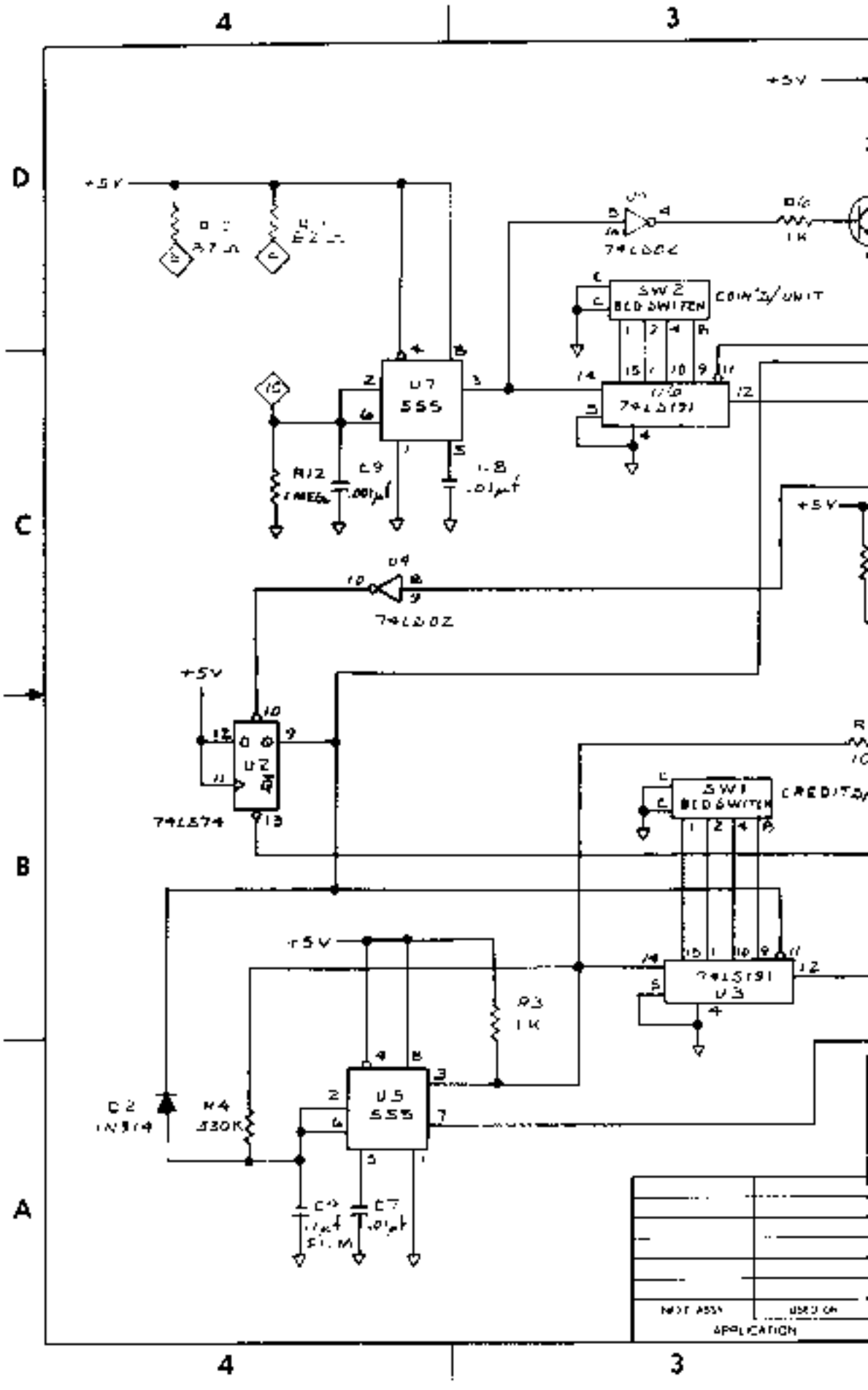
4
3
D
C
B
A
+5V
U7
555
SW2
BCD SWITCH
COIN'S/UNIT
74LS191
U4
74LS02
U2
74LS74
SW1
BCD SWITCH
CREDIT'S/
74LS191
U3
U5
555
R3
1K
C2
1N914
R4
330K
NOT ASSY
USED ON
APPLICATION

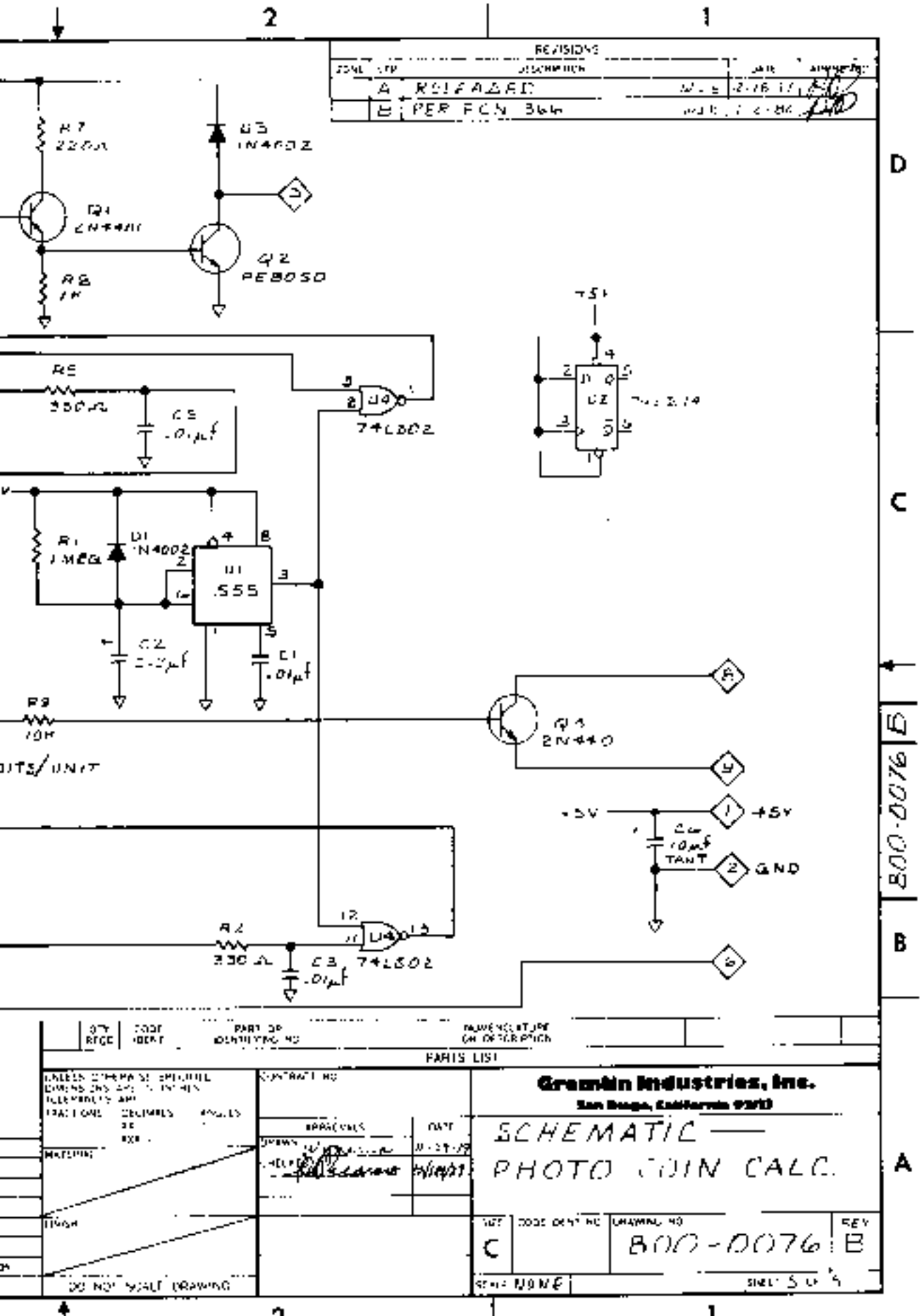
REVISIONS
A RELEASED
B PER ECN 366
R7 220Ω
D3 1N4002
Q1 2N4401
Q2 PE8050
R8 1K
R5 330Ω
C5 .01µf
U4 74LS02
+5V
U2 74LS74
R1 1MEG
D1 1N4002
U1 555
C2 2.2µf
C1 .01µf
R9 10K
Q3 2N440
+5V
C4 10µf TANT
+5V
GND
R2 330Ω
C3 .01µf
U4 74LS02
PARTS LIST
Gremlin Industries, Inc.
San Diego, California 92123
SCHEMATIC
PHOTO COIN CALC.
C
800-0076
B
NONE
SHEET 5 OF 5
DO NOT SCALE DRAWING
800-0076

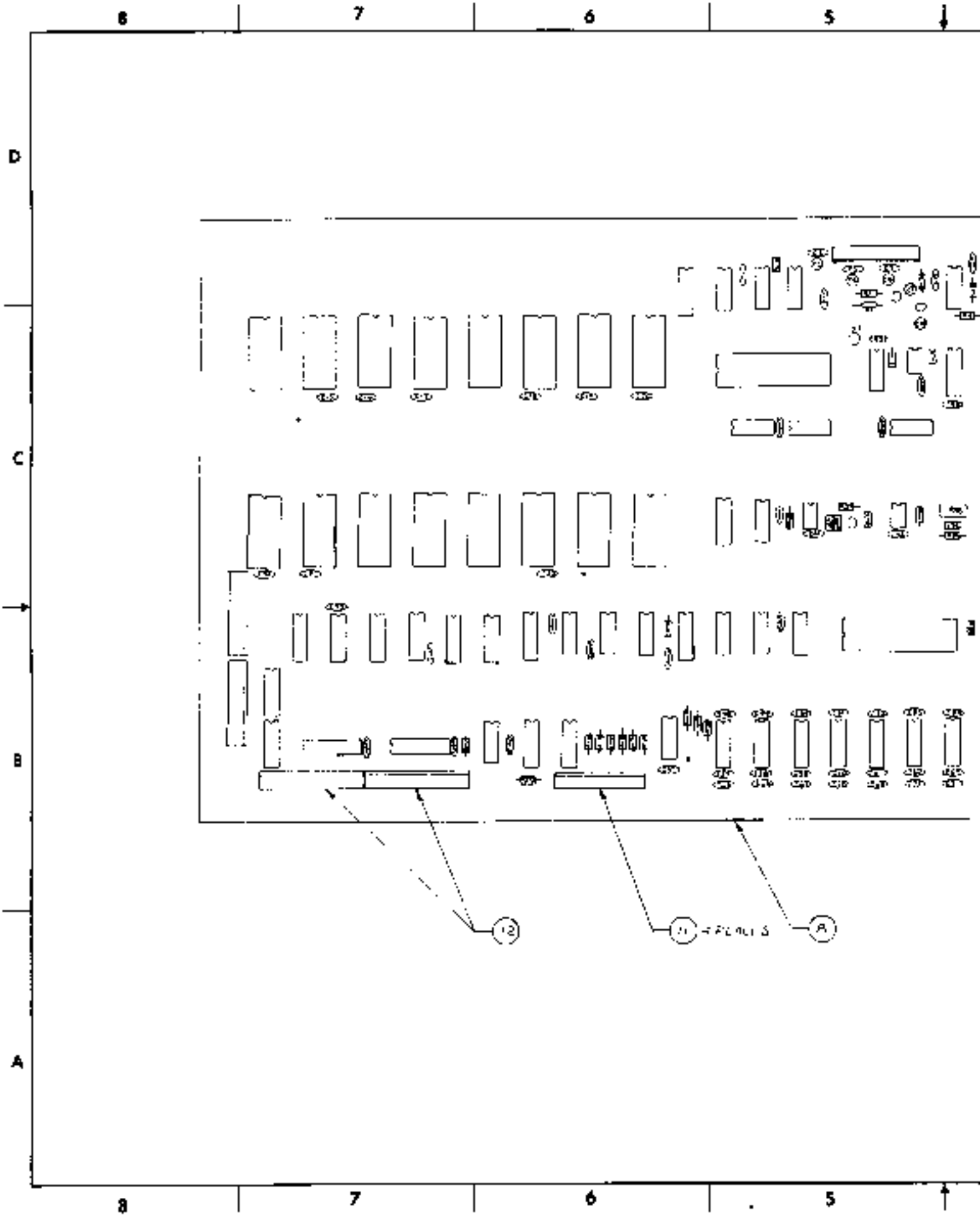
8
7
6
5
D
C
B
A
12
11
8

REVISIONS				
ZONE	LTR	DESCRIPTION	DATE	APPROVED
	A	RELEASED		
	B	[illegible]		
	C	[illegible]		

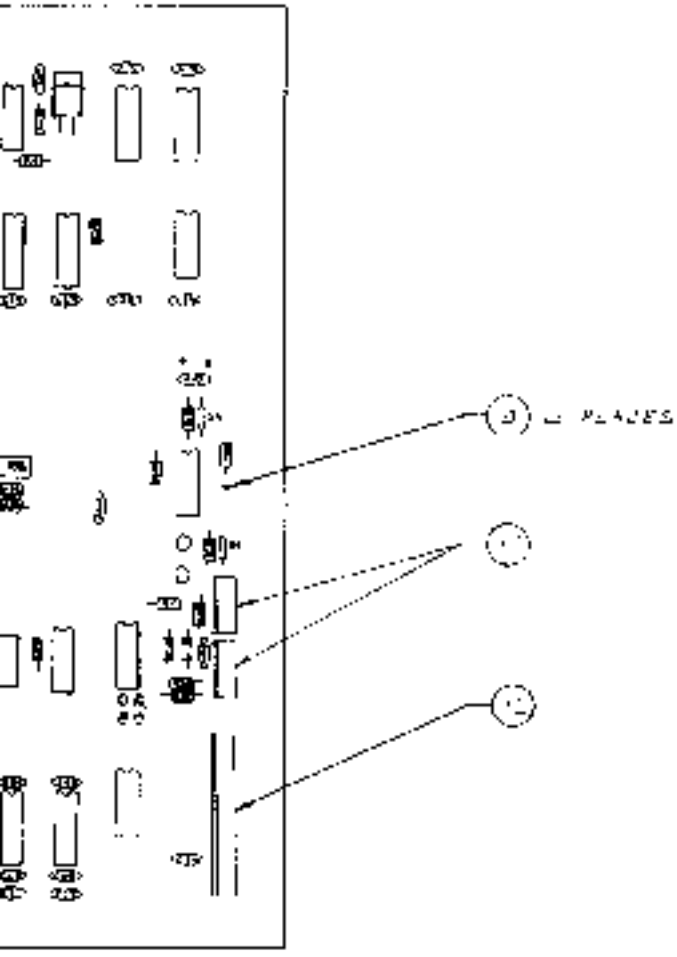

SEE DETACHED PARTS LIST

QTY REQD	CODE MAP	PART OR IDENTIFYING NO.	NOMENCLATURE OR DESCRIPTION
			PARTS LIST

UNLESS OTHERWISE SPECIFIED DIMENSIONS ARE IN INCHES TOLERANCES ARE

FRACTIONS	DECIMALS	ANGLES
±	.XX ± .XXX ±	±

CONTRACT NO

APPROVALS	DATE
DRAWN	
CHECKED	

MATERIAL

FINISH

DO NOT SCALE DRAWING

Gremlin Industries, Inc.

[illegible]

SIZE D | CODE IDENT NO | DRAWING NO | REV

SCALE | SHEET 1 OF 1

NEXT ASSY | USED ON

APPLICATION

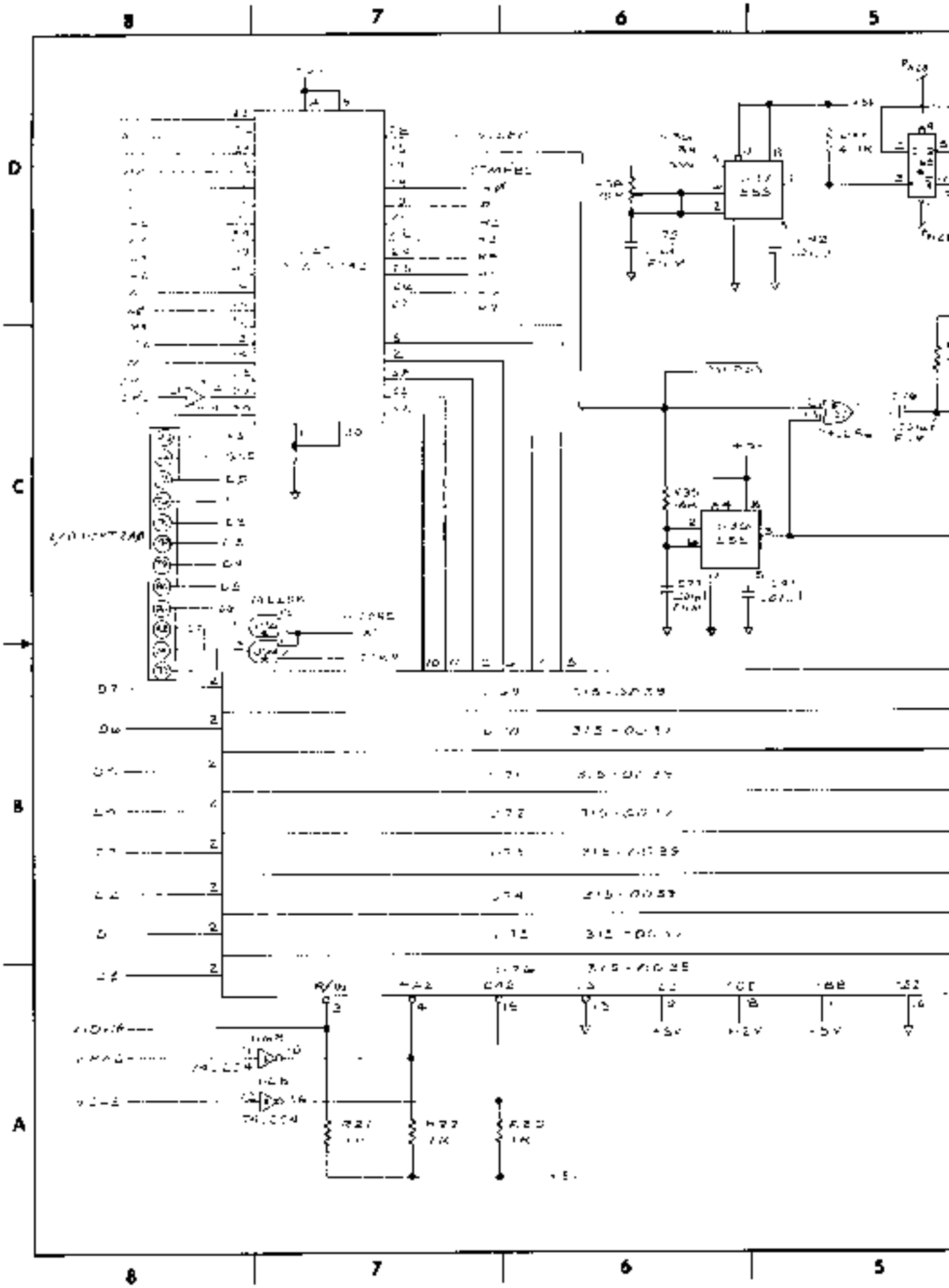

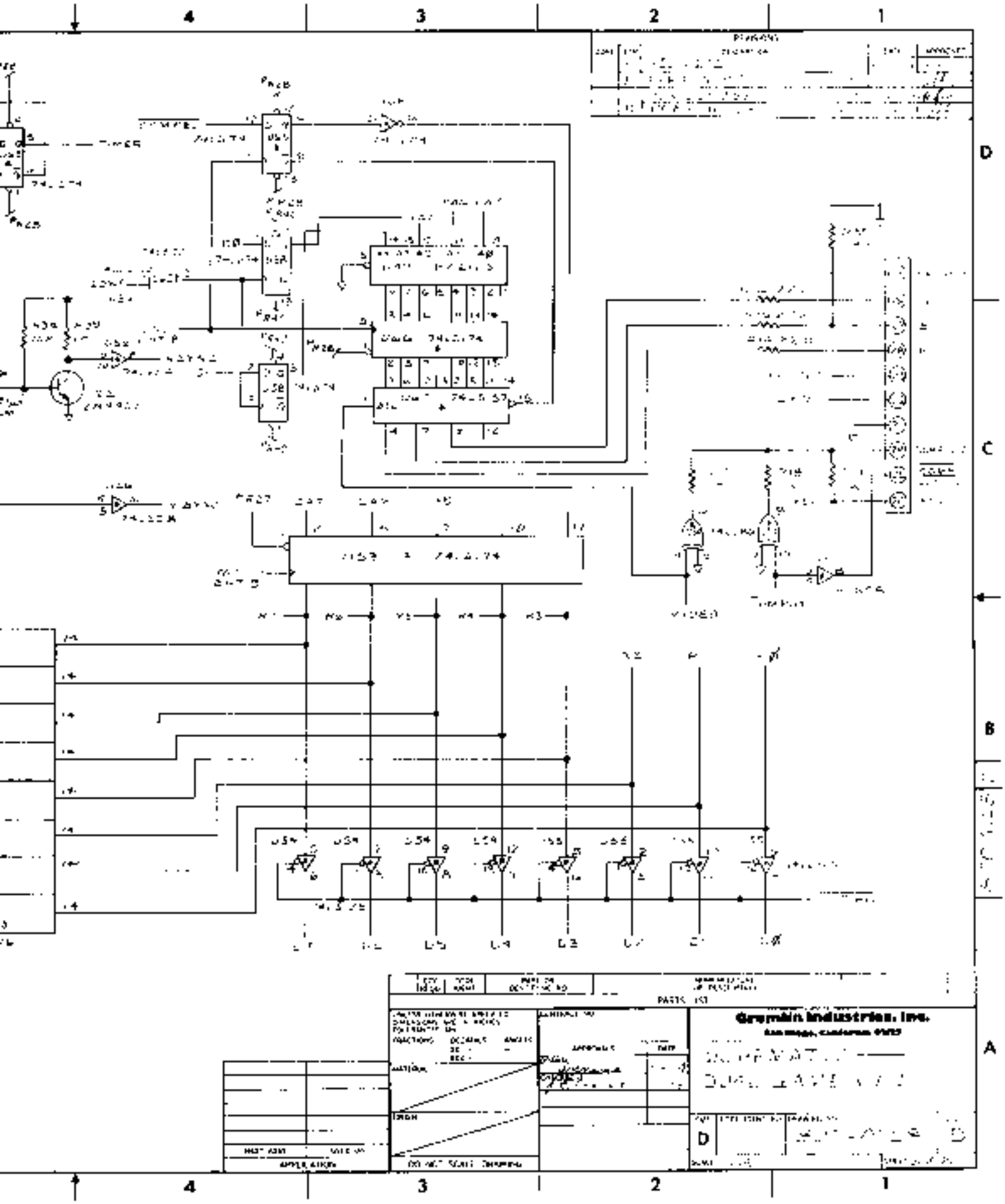
Gremlin Industries, Inc.
D

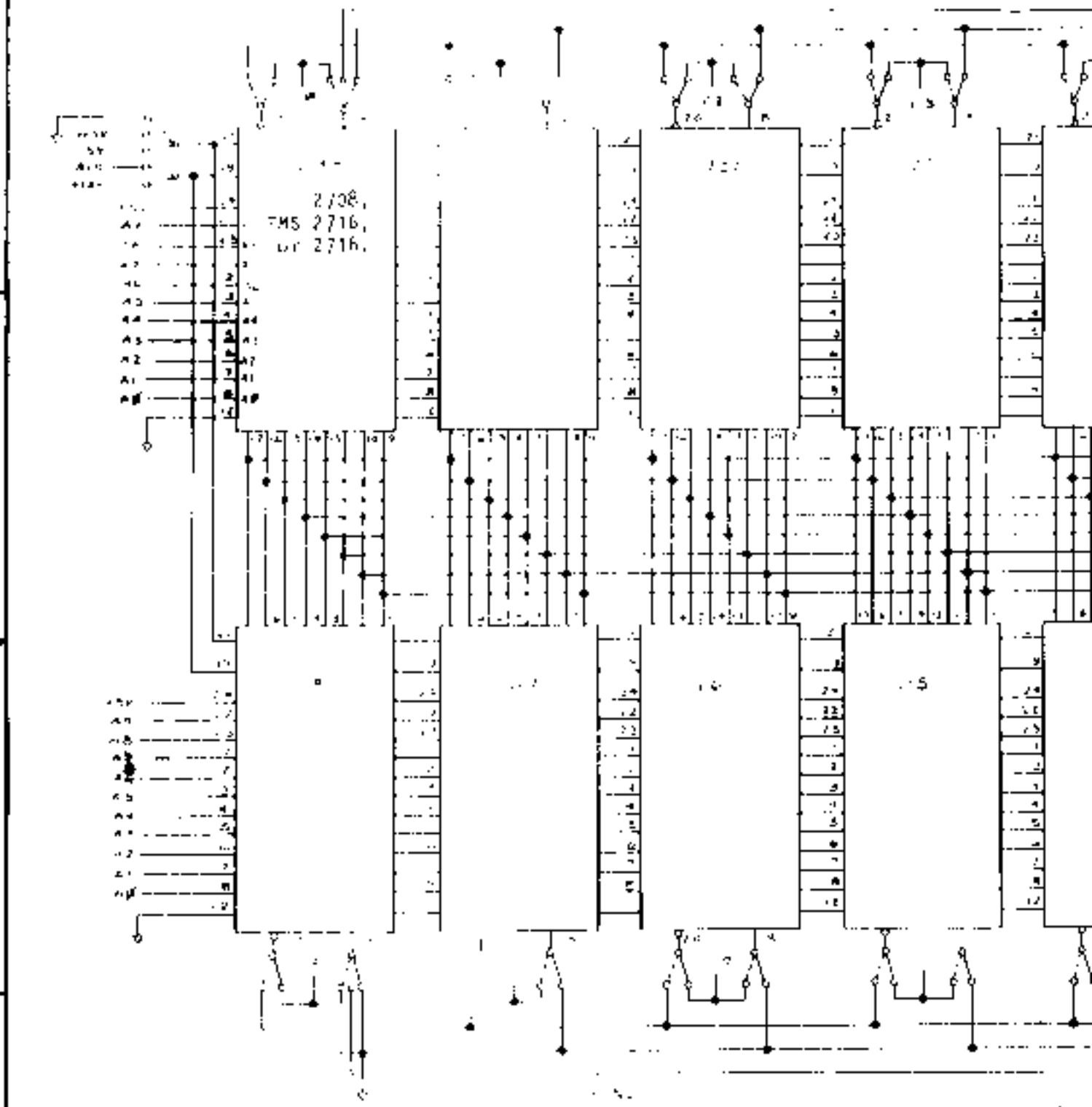

		ALL	E-E2, E5-E6, F8-E9, E0-E2
		U15, U3, U12, U9, U27, U18, U6, U24, U2	C-E3, E5-E6, E8-E9, E0-E2
		U33, U30, U21, U9, U27, U18, U6, U24, U2	E1-E3, E5-E6, E8-E9, E0-E2
		U33, U27, U18, U9	[illegible]
		U33, U27, U18, U9	[illegible]

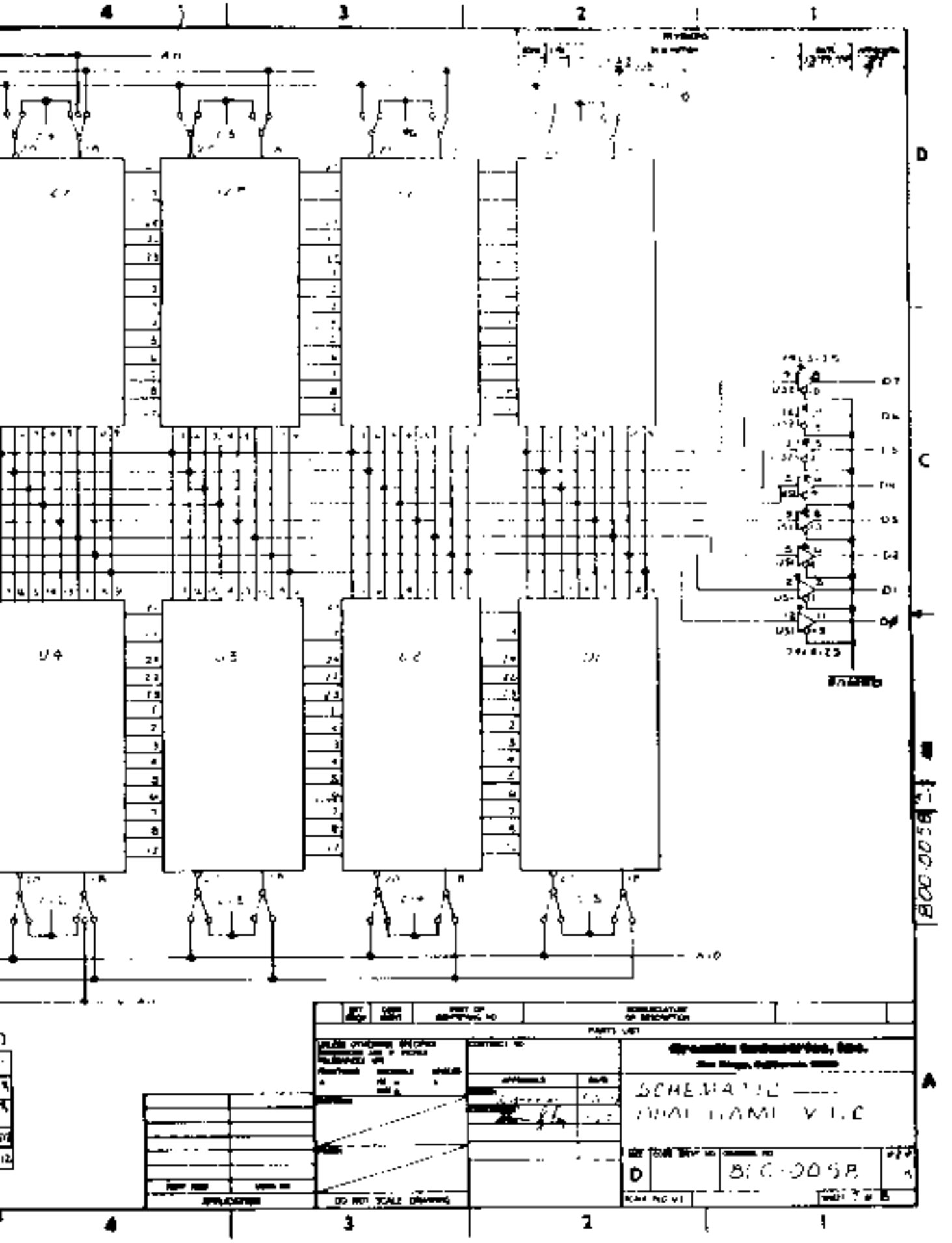
SCHEMATIC
DO NOT SCALE DRAWING
D
B/C-005B

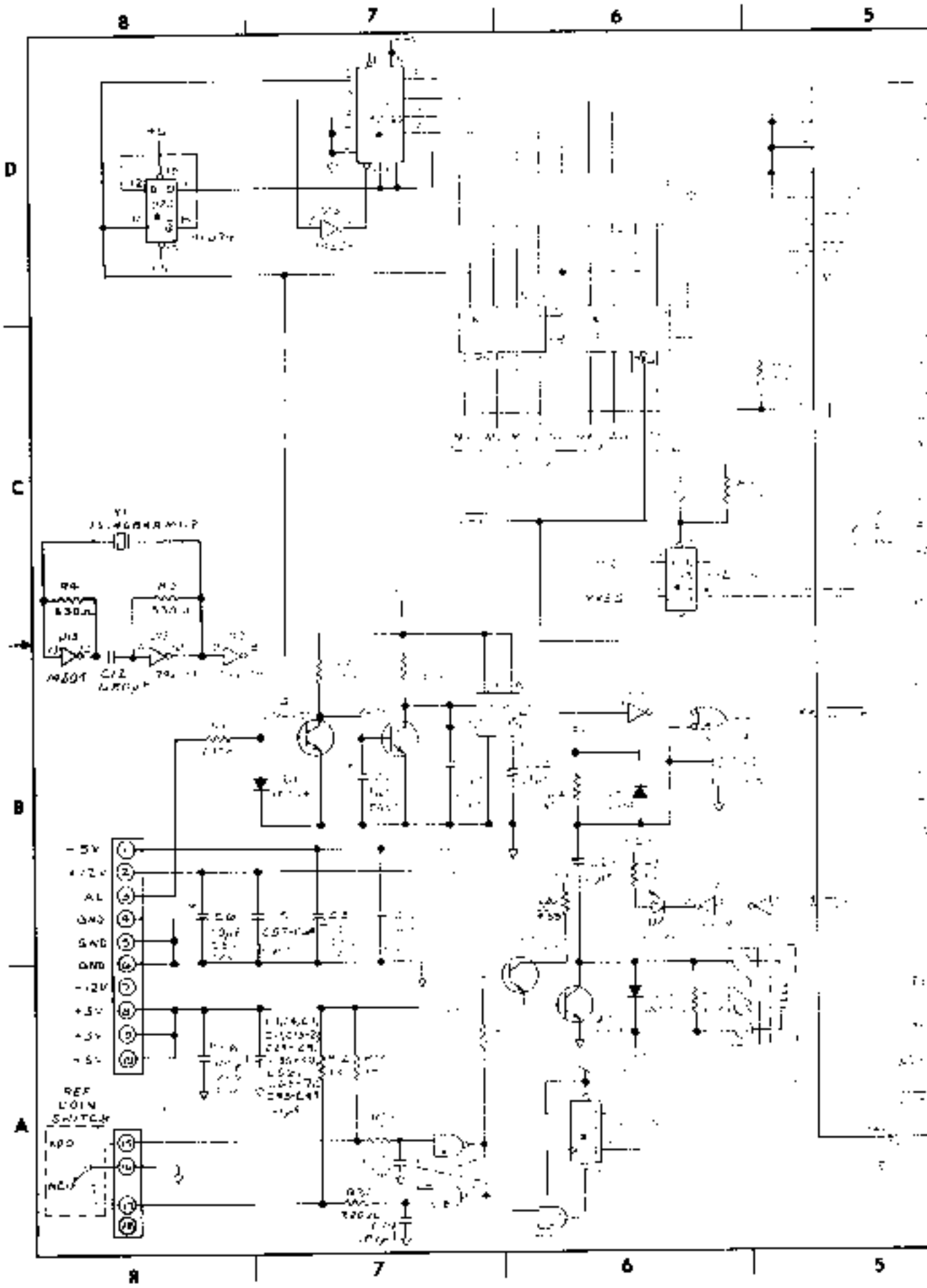
8
7
6
5
D
C
B
A
Y1
R4
R3
C12
-5V
+12V
AL
GND
GND
GND
-12V
+5V
+5V
+5V
REF
COIN
SWITCH
NO
NC

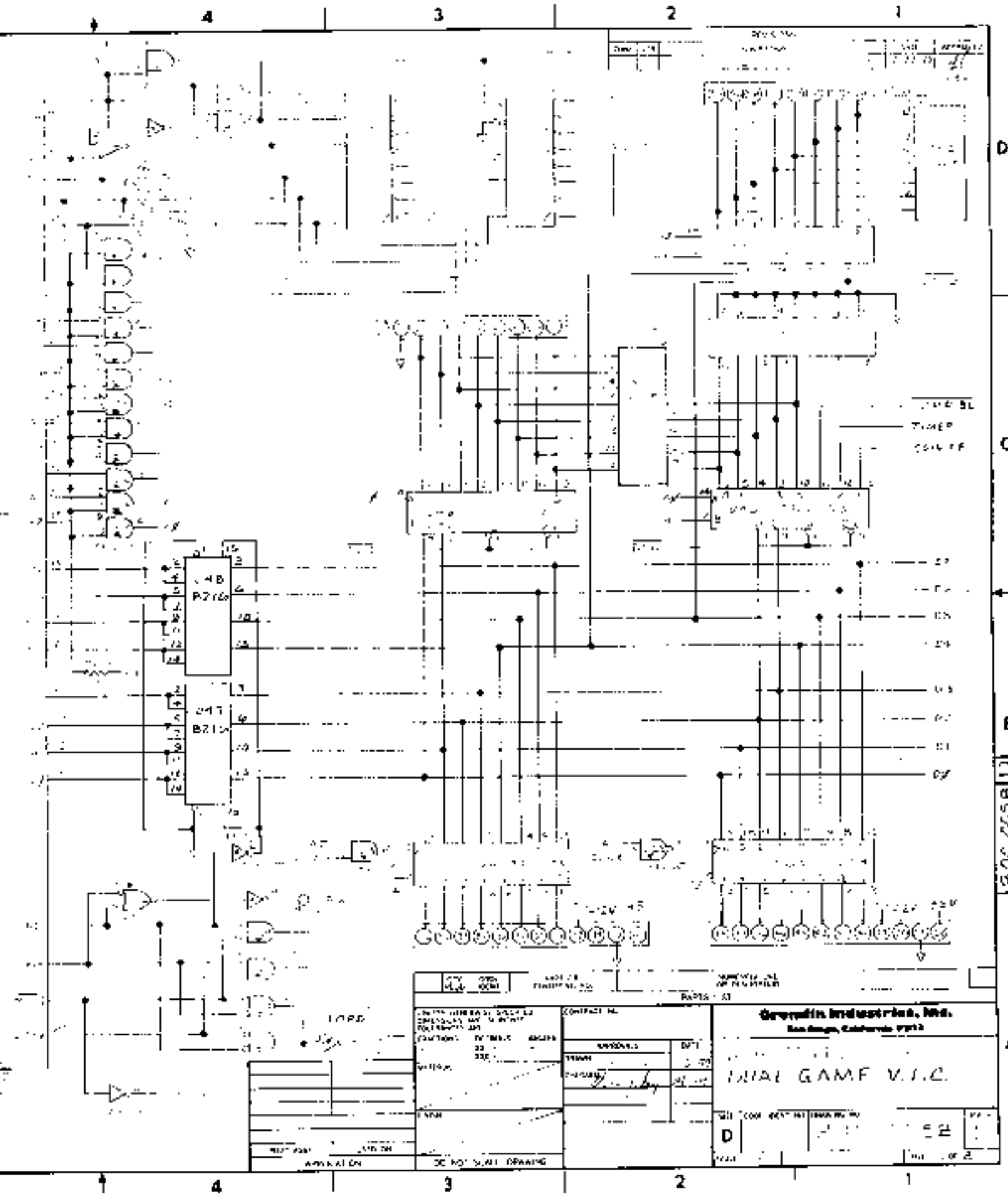
Gremlin Industries, Inc.
DUAL GAME V.I.C.
D
DO NOT SCALE DRAWING

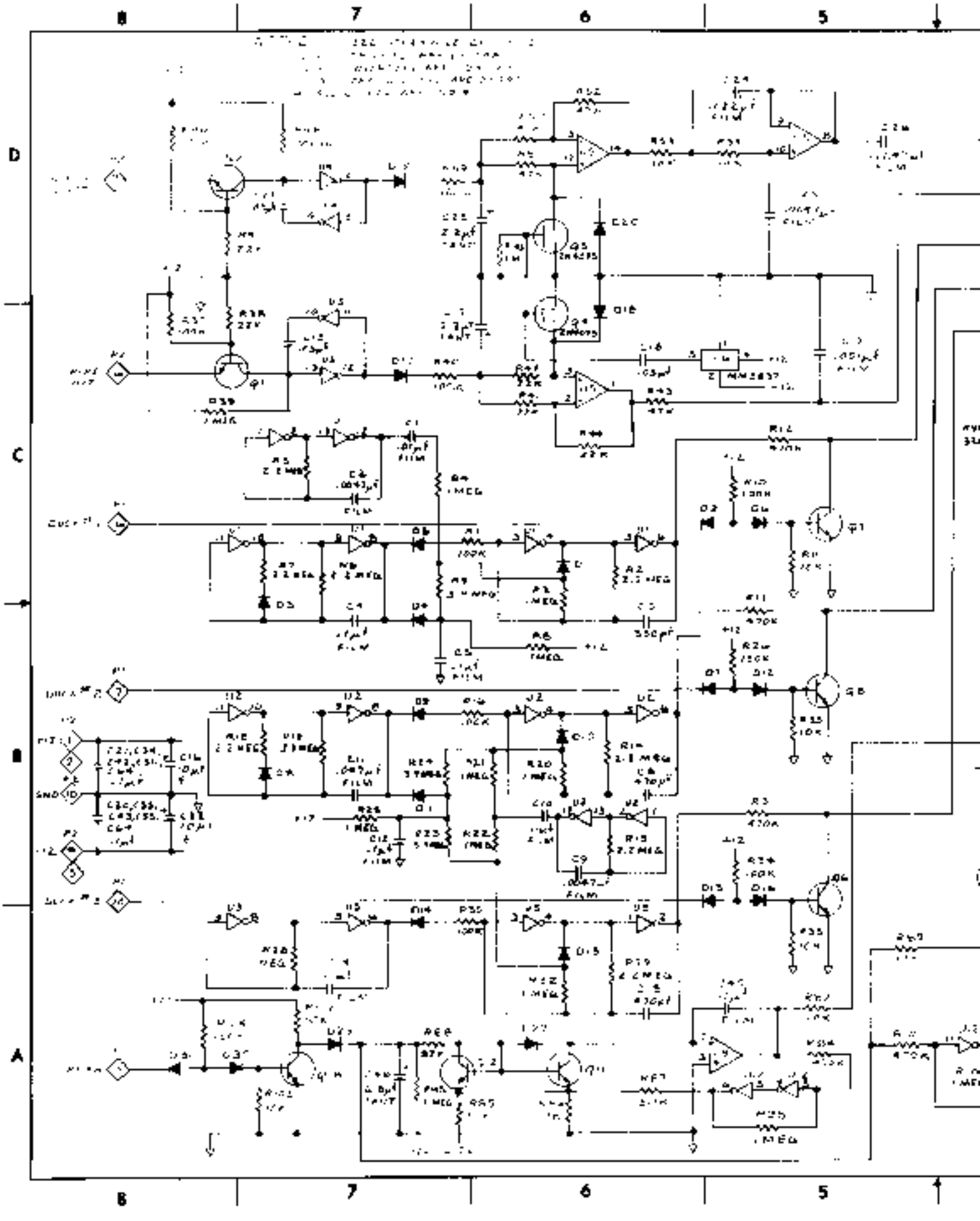

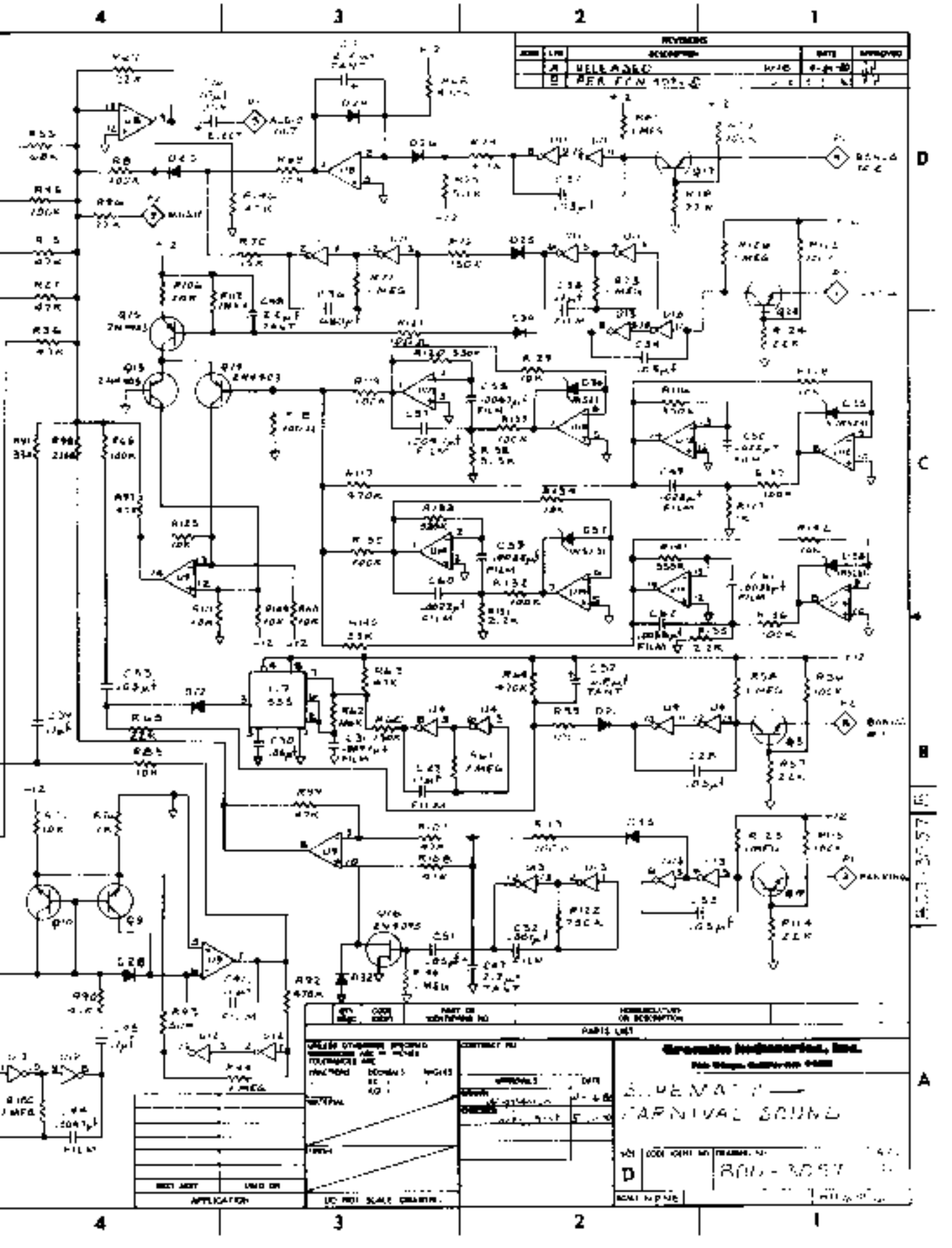
REVISIONS
RELEASED
PER ECN
PARTS LIST
CARNIVAL SOUND
D
RDL-3057

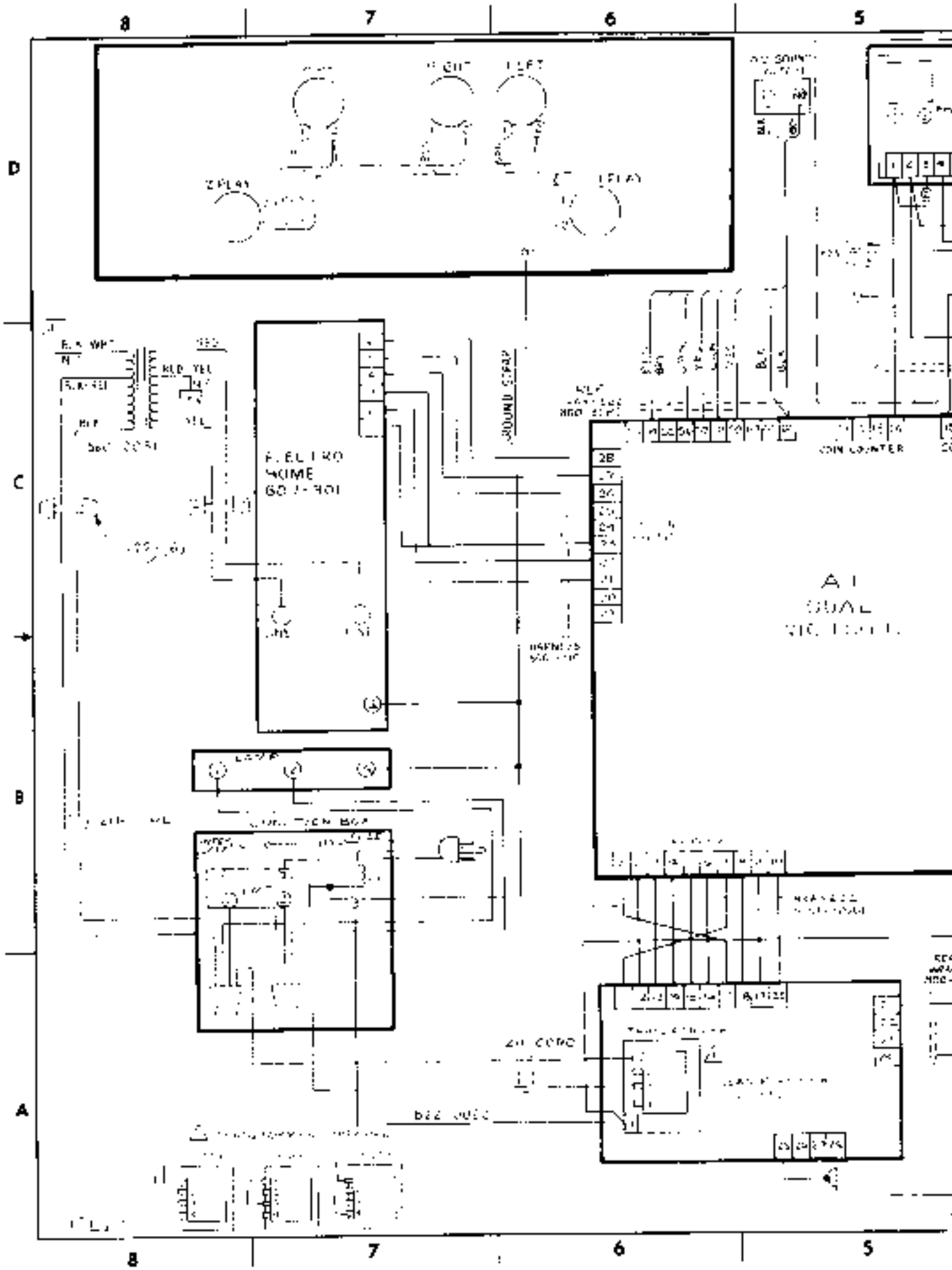
8
7
6
5
D
C
B
A
RIGHT
LEFT
2PLAY
1PLAY
ELECTRO
SCIME
GOLF-101
GROUND STRAP
COIN COUNTER
A1
DUAL
COIN BOX
HARNESS
BLK WIRE

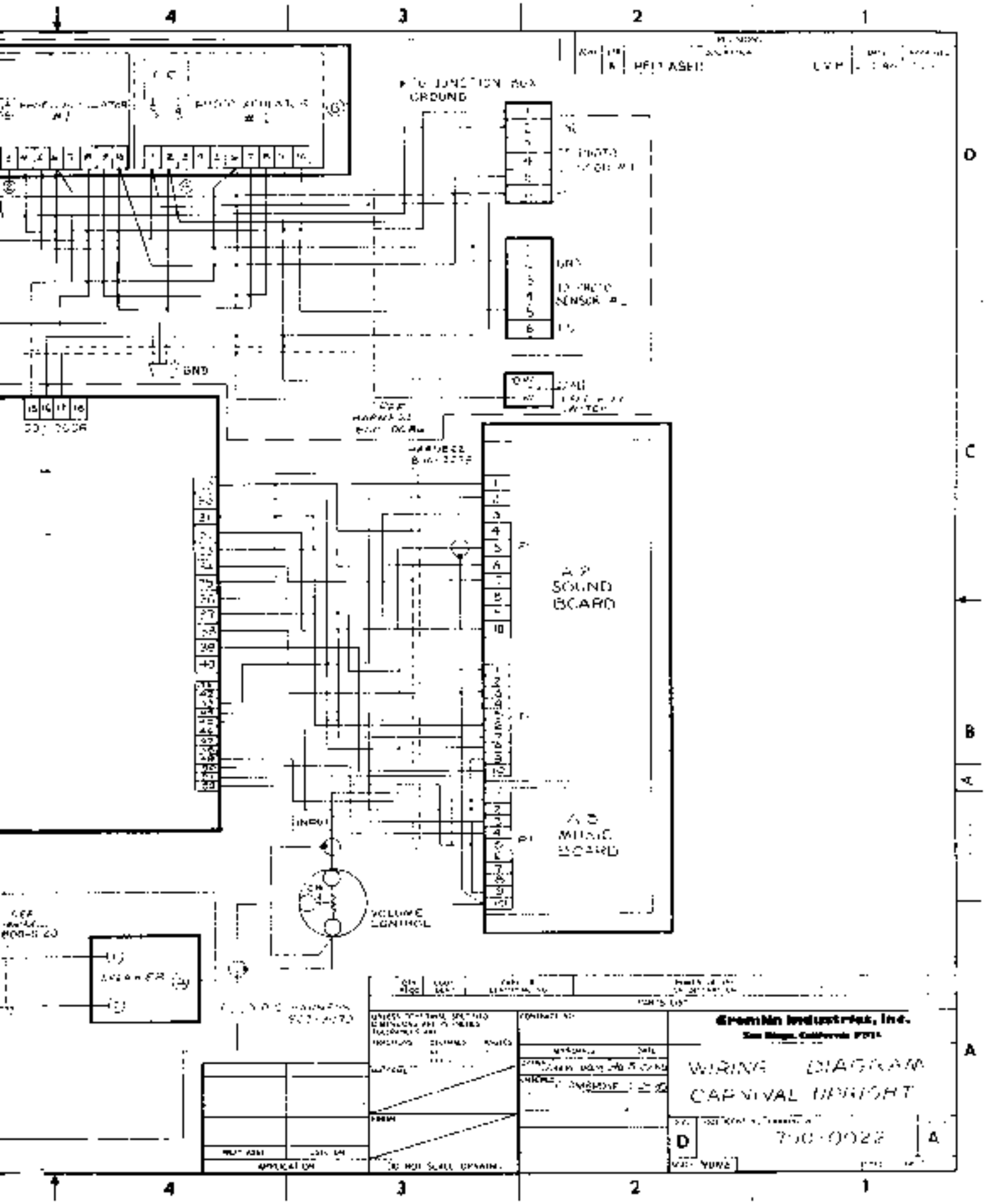
GROUND
GND
SOUND
BOARD
MUSIC
BOARD
VOLUME
CONTROL
Cromlin Industries, Inc.
WIRING DIAGRAM
CARNIVAL NIGHT
D
A

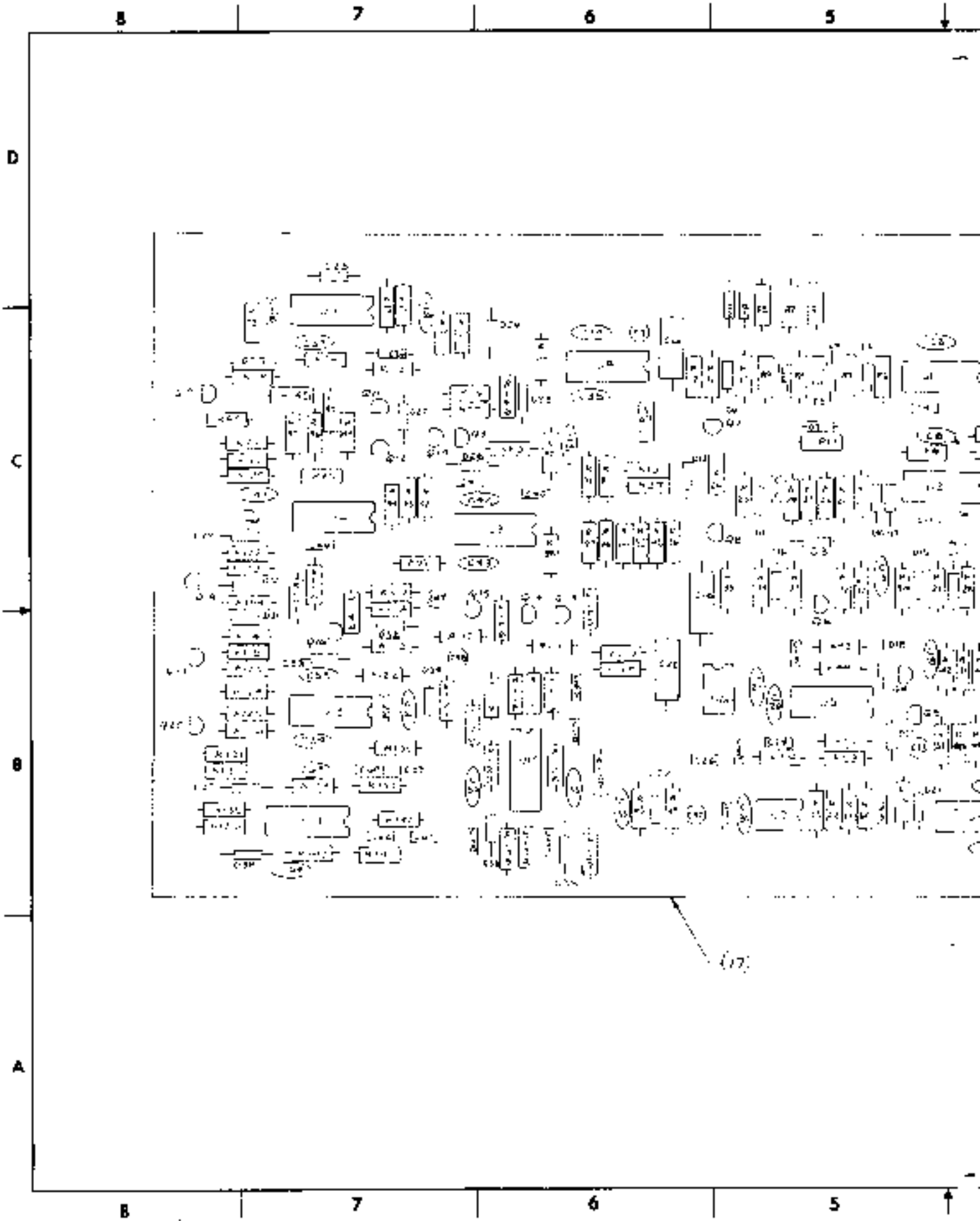

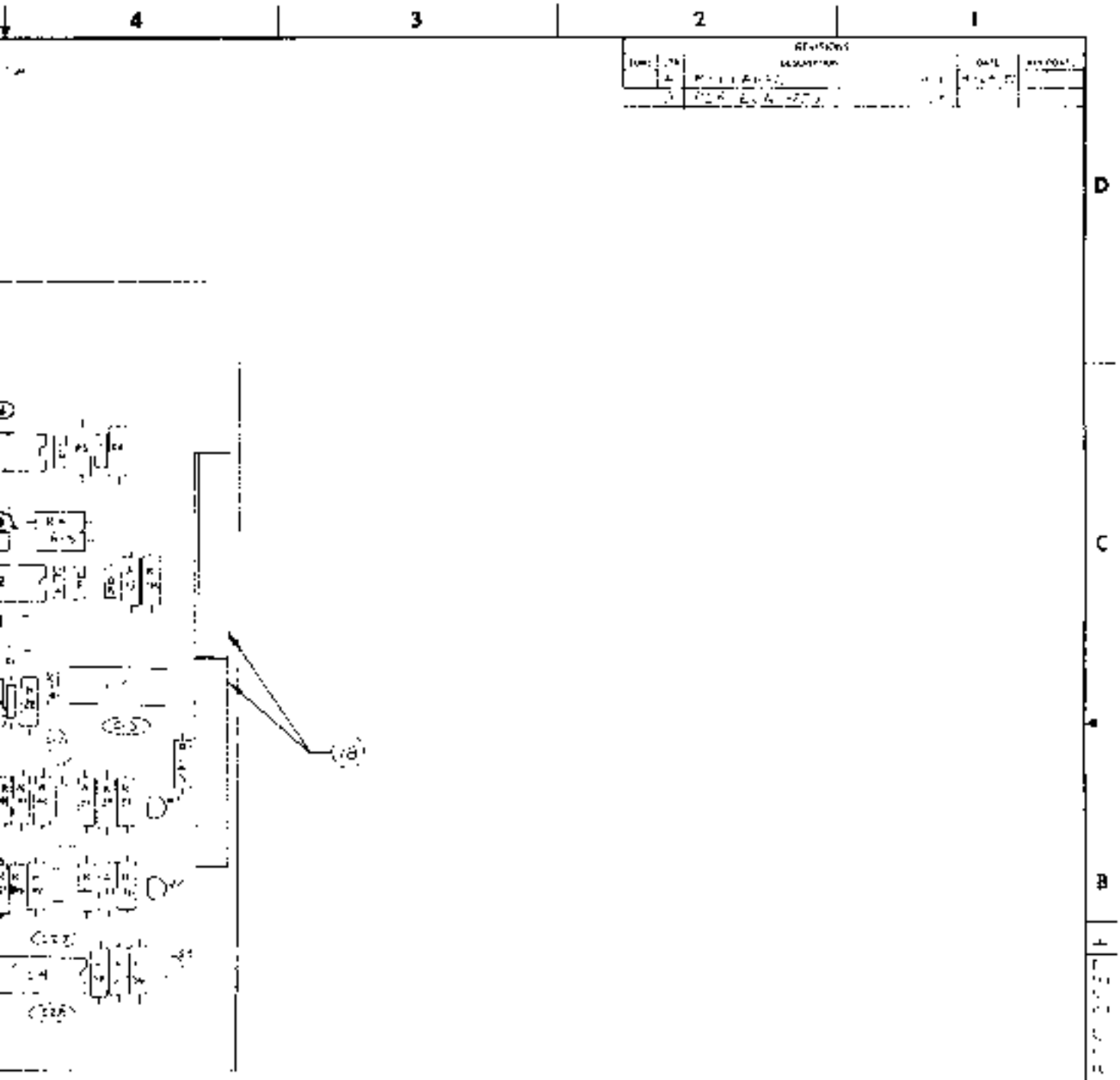

SEE DETAILED PARTS LIST

Gremlin Industries, Inc.

DO NOT SCALE DRAWING

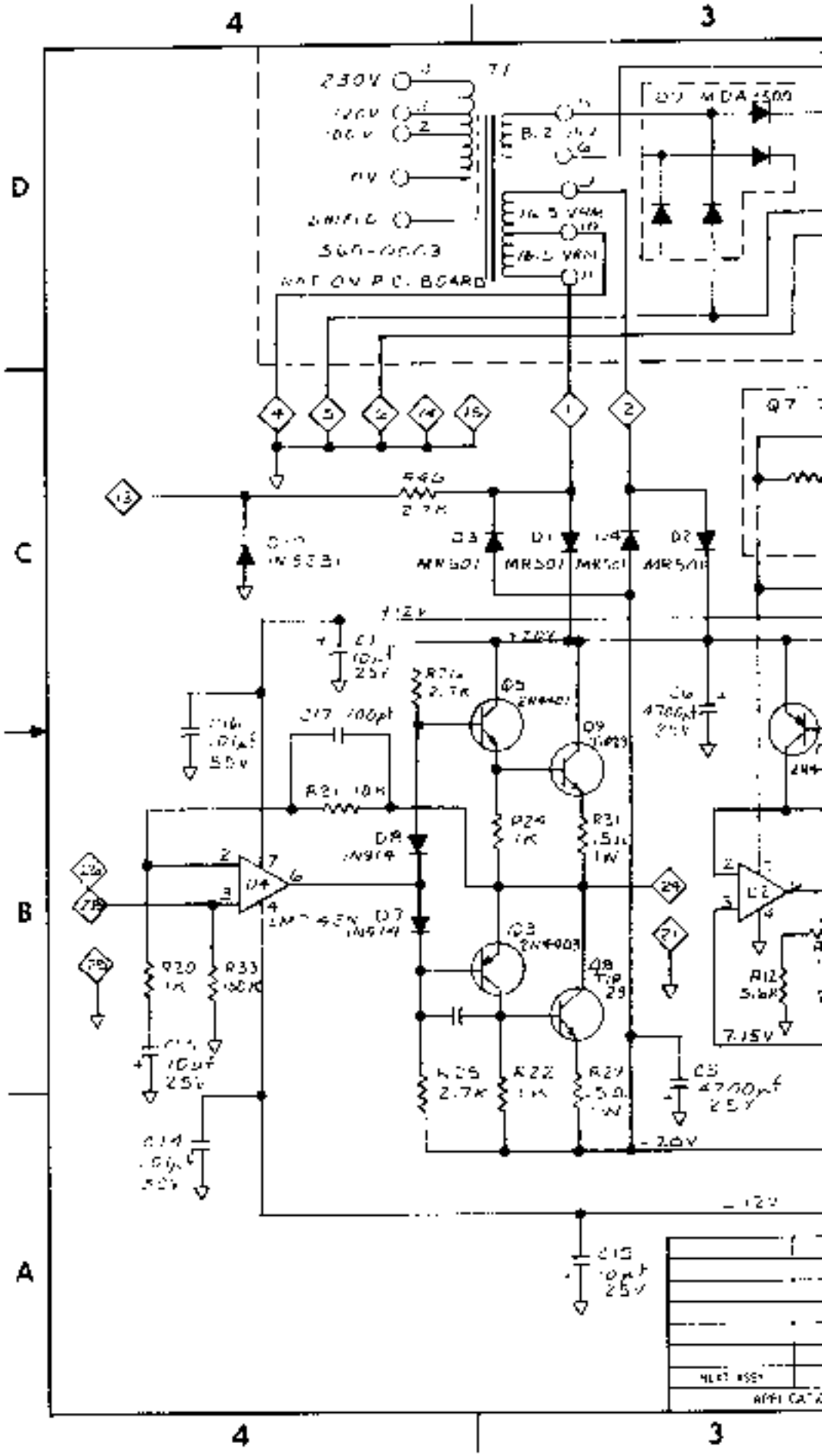
4
3
D
C
B
A
230V
T1
D1 MDA 1500
NOT ON P.C. BOARD
Q7
R46
2.7K
D3
D1
D2
MR501
MR501
MR501
MR501
+12V
C1
10µf
25V
R24
2.7K
Q5
2N4401
Q9
2N4403
C6
4700µf
25V
C16
.01µf
50V
C17
100pf
R21
10K
D8
1N914
R24
1K
R31
.51Ω
1W
U4
LM 741CN
D7
1N914
Q3
2N4403
Q8
TIP
29
R20
1K
R33
100K
C11
10µf
25V
R25
2.7K
R22
1K
R27
.51Ω
1W
C5
4700µf
25V
C14
.01µf
50V
-20V
-12V
C15
10µf
25V
U2
R12
5.6K
7.15V

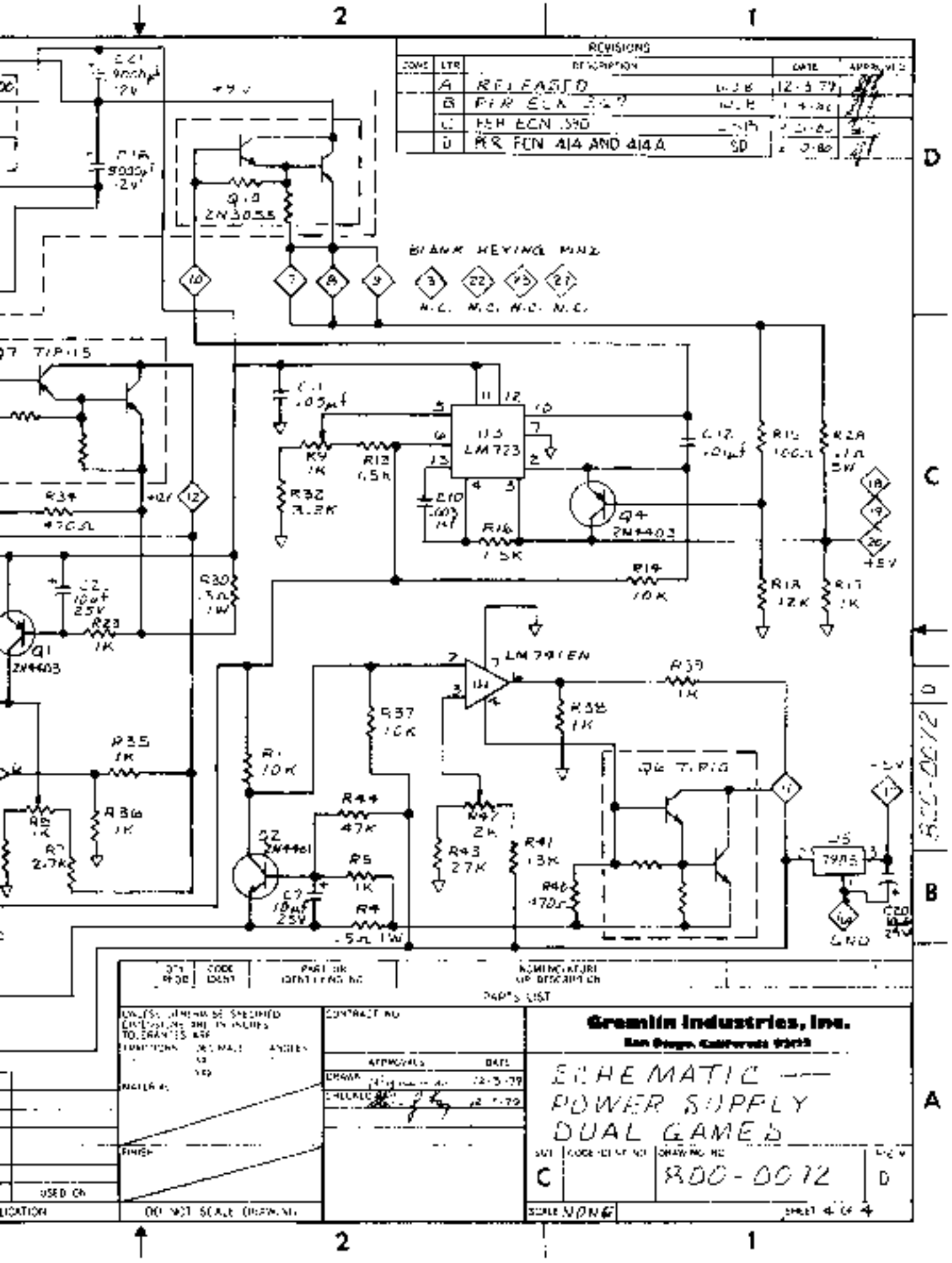
REVISIONS
ZONE LTR DESCRIPTION DATE APPROVED
A REL FAST D 12-3-79
B PER ECN 350
C PER ECN 350
D PER ECN 414 AND 414A SD
BLANK KEYING PINS
N.C. N.C. N.C. N.C.
Q3 2N3055
Q7 TIP115
U3 LM723
Q4 2N4403
Q1 2N4403
Q2 2N4401
LM741EN
Q6 TIP110
U5 7905
GND
+5V
-5V
+12V
+42V
R34 470Ω
R30 .5Ω 1W
R23 1K
R35 1K
R36 1K
R7 2.7K
R8 1K
R9 1K
R12 1.5K
R32 3.3K
R16 1.5K
R14 10K
R15 100Ω
R28 .1Ω 5W
R13 12K
R17 1K
R39 1K
R38 1K
R37 10K
R1 10K
R44 47K
R47 2K
R43 27K
R41 13K
R46 470Ω
R5 1K
R4 .5Ω 1W
C1 .05μf
C2 10μf 25V
C7 10μf 25V
C10 .003 μf
C12 .01μf
C20 10μf 25V
PART OR IDENTIFYING NO
NOMENCLATURE OR DESCRIPTION
PARTS LIST
CONTRACT NO
APPROVALS DATE
DRAWN 12-3-79
CHECKED 12-7-79
Gremlin Industries, Inc.
San Diego, California 92123
SCHEMATIC — POWER SUPPLY DUAL GAME B
SIZE C
CODE IDENT NO
DRAWING NO R00-0012
REV D
SCALE NONE
SHEET 4 OF 4
USED ON
DO NOT SCALE DRAWING
R00-0012